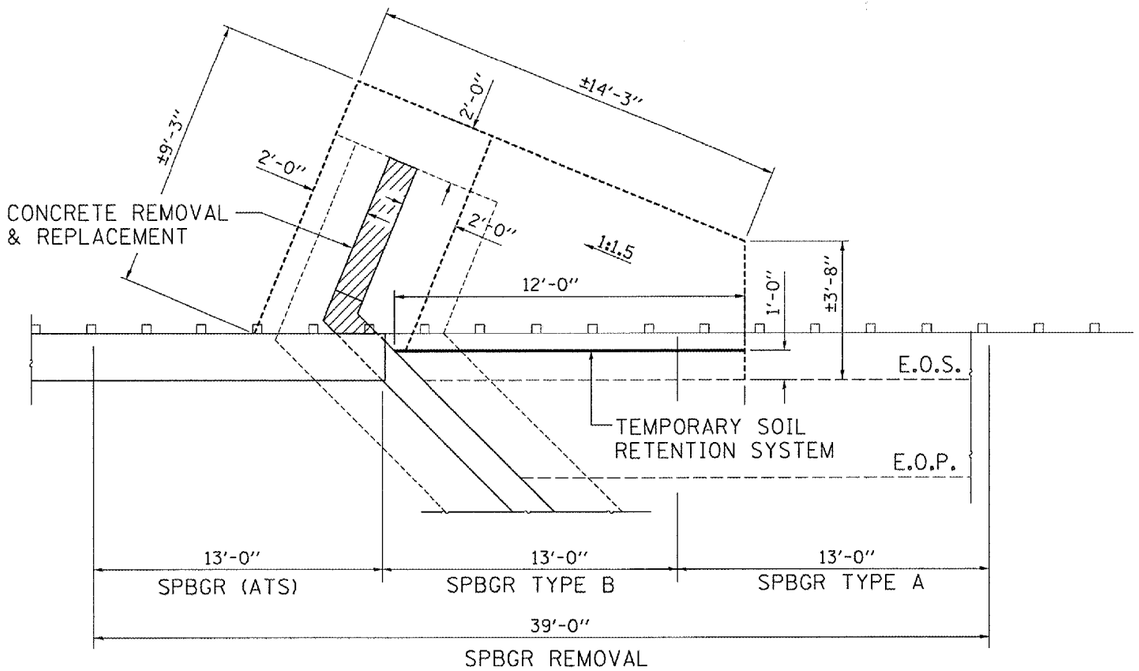

DETAIL "A"

TOTAL BILL OF MATERIAL

TEMPORARY SOIL RETENTION SYSTEM	SQ. FT.	100
STRUCTURE EXCAVATION	CU. YD.	30
CONCRETE REMOVAL	Cu. Yd.	2.4
REINFORCEMENT BARS EPOXY COATED	POUNDS	160
CONCRETE BOX CULVERT	Cu. Yd.	2.4
SHEET WATERPROOFING MEMBRANE SYSTEM	SQ. YD.	12
FURNISHED EXCAVATION	CU. YD.	30

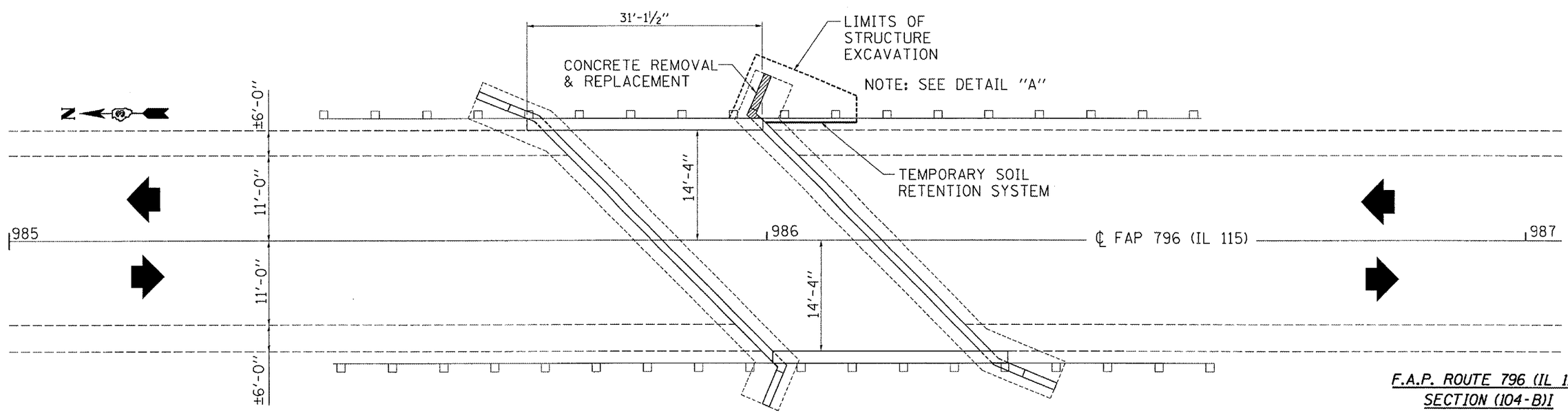

PLAN

F.A.P. ROUTE 796 (IL 115)
SECTION (104-B)I
KANKAKEE COUNTY
STA. 986+00
S.N. 046-0066

FILE NAME = c:\projects\mchd07\0450066\0450066.dgn	USER NAME = veninger.jr	DESIGNED -	REVISED -
		DRAWN -	REVISED -
	PLOT SCALE = 103.4029 ' / IN.	CHECKED -	REVISED -
	PLOT DATE = Feb 11, 2008 - 09:24:35 AM	DATE -	REVISED -

STATE OF ILLINOIS
DEPARTMENT OF TRANSPORTATION

EXISTING PLAN

SCALE: | SHEET NO. 1 OF 7 SHEETS | STA. TO STA.

F.A.P. RTE.	SECTION	COUNTY	TOTAL SHEETS	SHEET NO.
796	(104B)I	KANKAKEE	12	6
		CONTRACT NO. 66759		

FED. ROAD DIST. NO. | ILLINOIS | FED. AID PROJECT