STATE OF ILLINOIS
DEPARTMENT OF TRANSPORTATION

ROUTE NO.	SECTION	COUNTY	TOTAL SHEETS	SHEET NO.
		Henderson	15	15
FED. ROAD DIST. NO. 7		ILLINOIS	FED. AID PROJECT-	

SHEET NO. 3
3 SHEETS

Contract Number: 68771

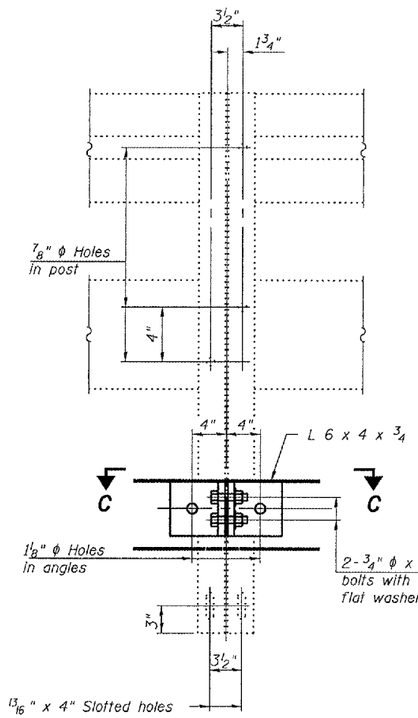

SECTION B-B

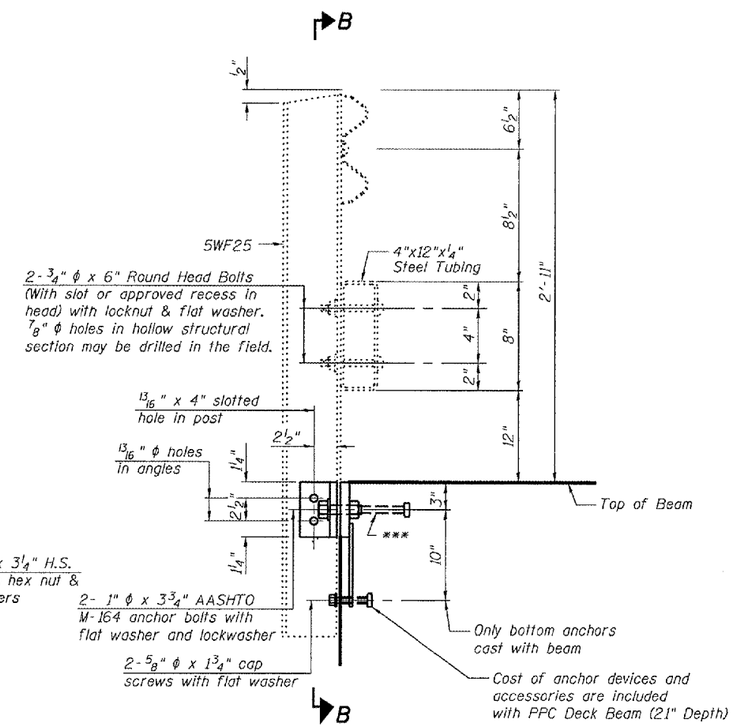

SECTION AT RAIL POST

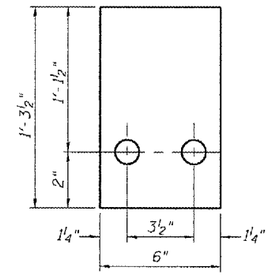

¼" SHIM PL

Notes:

All field drilled holes shall be coated with an approved zinc rich paint before erection.

For multi-span bridges, sufficient ¼" x 6" x 1'-2" galvanized steel shims shall be provided to align rail between adjacent spans. Cost included with with PPC Deck Beam (21" Depth).

All steel rail members shall be galvanized according to Article 509.05 of the Standard Specifications.

***The studs of the anchor devices shall be placed below the top reinforcement bars and the outermost longitudinal reinforcement bar shall be placed directly above the studs of the rail post anchor device.

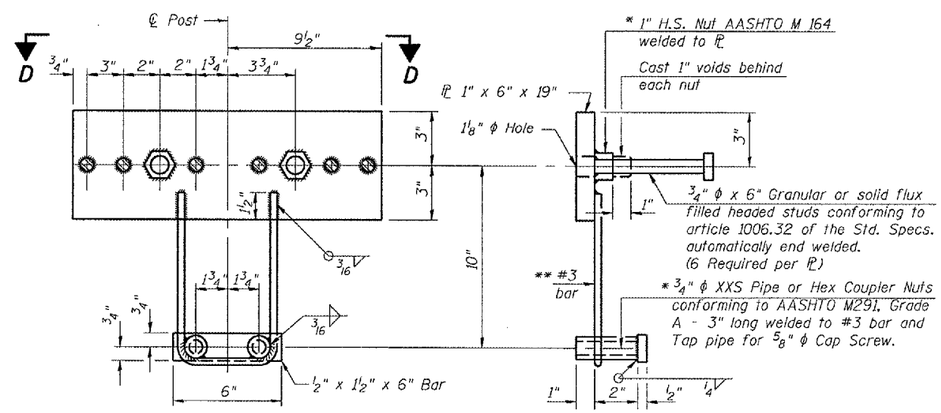

ANCHOR DEVICE

* Threaded areas shall be plugged or blocked off during casting of beam. Galvanized after fabrication.

** Whenever the lower insert assemblies interfere with strand locations, the #3 bars shall be adjusted in order to allow raising or lowering of the lower inserts. Maximum adjustment not to exceed ½".

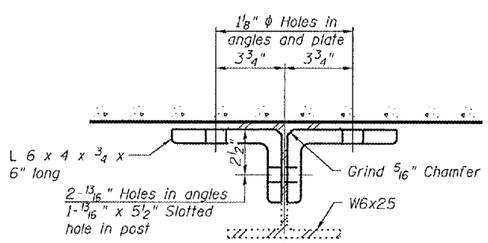

SECTION C-C

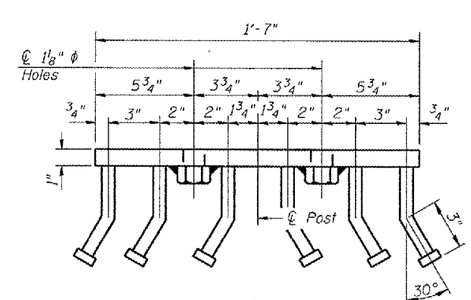

VIEW D-D

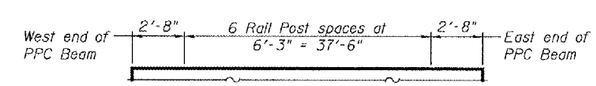

RAIL POST SPACING

DESIGNED	V.H.V.
CHECKED	A.J.B.
DRAWN	Drew Christopher
CHECKED	V.H.V. A.J.B.

February 26, 2008

EXAMINED [signature] ENGINEER OF STRUCTURAL SERVICES

PASSED [signature] ENGINEER OF BRIDGES AND STRUCTURES

RAIL DETAILS
F.A. RT. 45
HENDERSON COUNTY
SN 036-0003

SLT-94-001-07