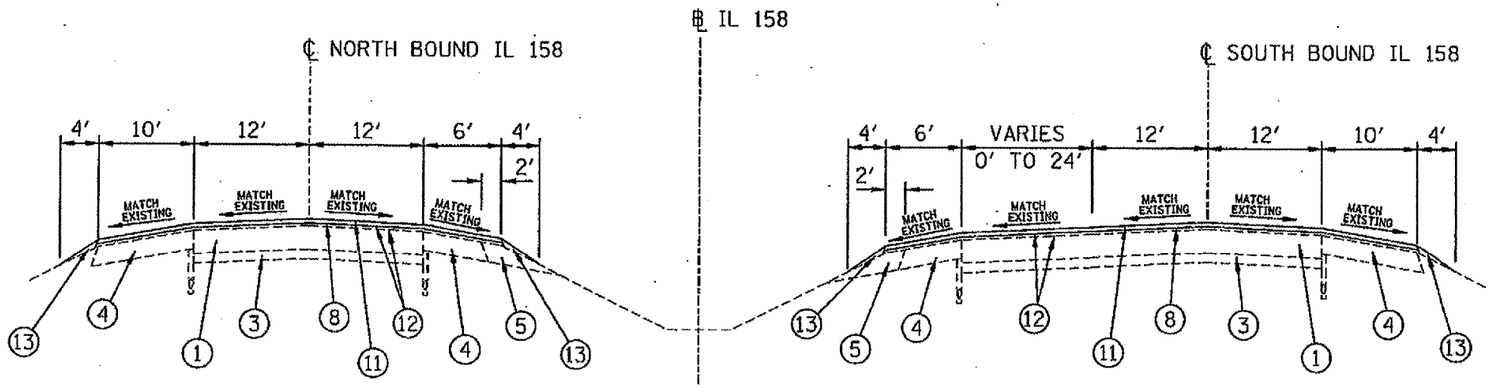

NORTH BOUND SECTION
STA. 189+30± TO STA. 194+27±
STA. 238+20± TO STA. 243+00±
STA. 342+00± TO STA. 348+20±

SOUTH BOUND SECTION
STA. 189+30± TO STA. 194+27±
STA. 238+20± TO STA. 242+38±
STA. 339+09± TO STA. 348+20±

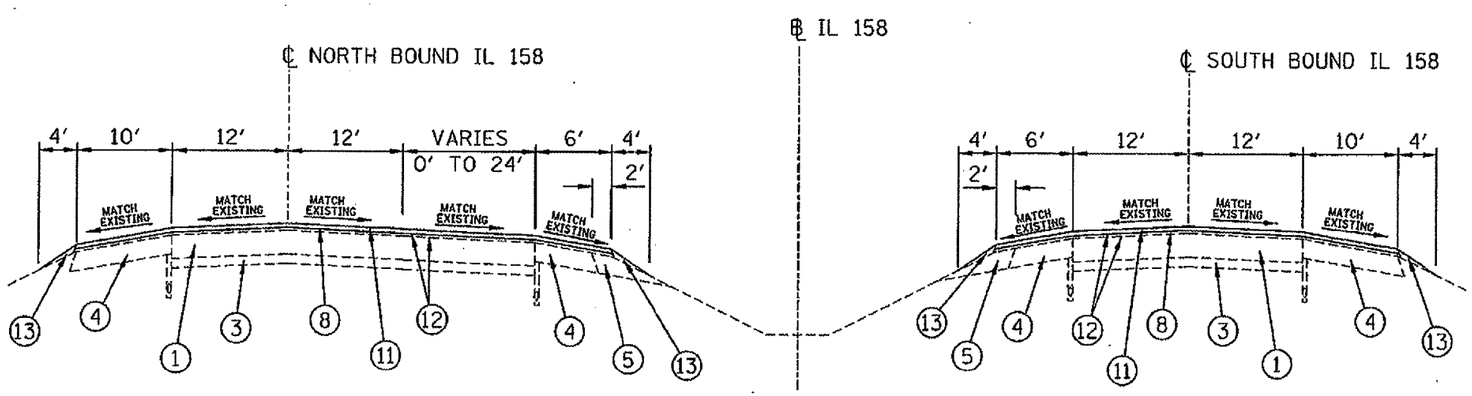

NORTH BOUND SECTION
STA. 204+60± TO STA. 206+26±
STA. 250+60± TO STA. 253+85±

SOUTH BOUND SECTION
STA. 204+60± TO STA. 206+26±
STA. 248+50± TO STA. 253+85±

LEGEND

1. EXISTING PCC PAVEMENT 8″
2. EXISTING CURB & GUTTER
3. EXISTING GRANULAR SUBBASE, 4″
4. EXISTING HOT-MIX ASPHALT SHOULDERS, 8″
5. EXISTING AGGREGATE SHOULDERS, 8″
6. HOT-MIX ASPHALT SURFACE REMOVAL, 3/4″
7. SURFACE REMOVAL, VARIABLE DEPTH (HMA OR PCC)
8. LEVELING BINDER (MACHINE METHOD), ( ), 1″
9. LEVELING BINDER (MACHINE METHOD), ( ), 3/4″
10. LEVELING BINDER (MACHINE METHOD), ( ), VARIABLE DEPTH
11. HOT-MIX ASPHALT SURFACE COURSE, ( ), 1 1/2 ″
12. BITUMINOUS MATERIALS AND AGGREGATE, (PRIME COAT)
13. AGGREGATE WEDGE SHOULDERS, TYPE B
14. EARTH EXCAVATION
15. FURNISHED EXCAVATION
16. PORTLAND CEMENT CONCRETE BASE COURSE 8″
17. COMBINATION CONCRETE CURB AND GUTTER, TYPE M-4.24
18. AGGREGATE BASE COURSE, TYPE A 4″
19. LIME MODIFIED SOIL 12″
20. HOT-MIX ASPHALT SHOULDERS 8″
21. HOT-MIX ASPHALT BINDER COURSE, IL-19.0, N70

FILE NAME = C11-15_TYPSECT_IL158.dgn	USER NAME = ewolz	DESIGNED - DHP	REVISED - 03/12/08	STATE OF ILLINOIS DEPARTMENT OF TRANSPORTATION	TYPICAL SECTIONS – IL RTE 158	F.A.P RTE.	SECTION	COUNTY	TOTAL SHEETS	SHEET NO.
		DRAWN - EDW	REVISED -			674	410, 410-1-1	ST. CLAIR	41	11
	PLOT SCALE = 7.5:1	CHECKED - SAR	REVISED -					CONTRACT NO. 76814		
	PLOT DATE = 3/12/2008	DATE - 01/30/08	REVISED -		SCALE: SHEET NO. OF SHEETS STA. TO STA.	FED. ROAD DIST. NO.	ILLINOIS	FED. AID PROJECT		