CONTRACT NO. 89347

F.A.U. RTE.	SECTION	COUNTY	TOTAL SHEETS	SHEET NO.
6761	04-00057-06-WR	TAZEWELL	154	98
STA.		TO STA.		
FED. ROAD DIST. NO. 4	ILLINOIS	FED. AID PROJECT		

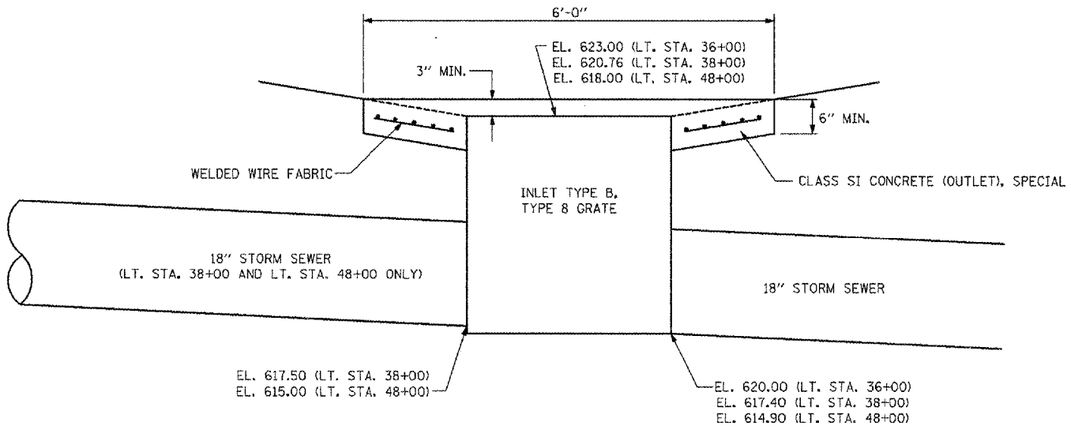

ELEVATION

LT. STA. 36+00, LT. STA. 38+00 AND LT. STA. 48+00

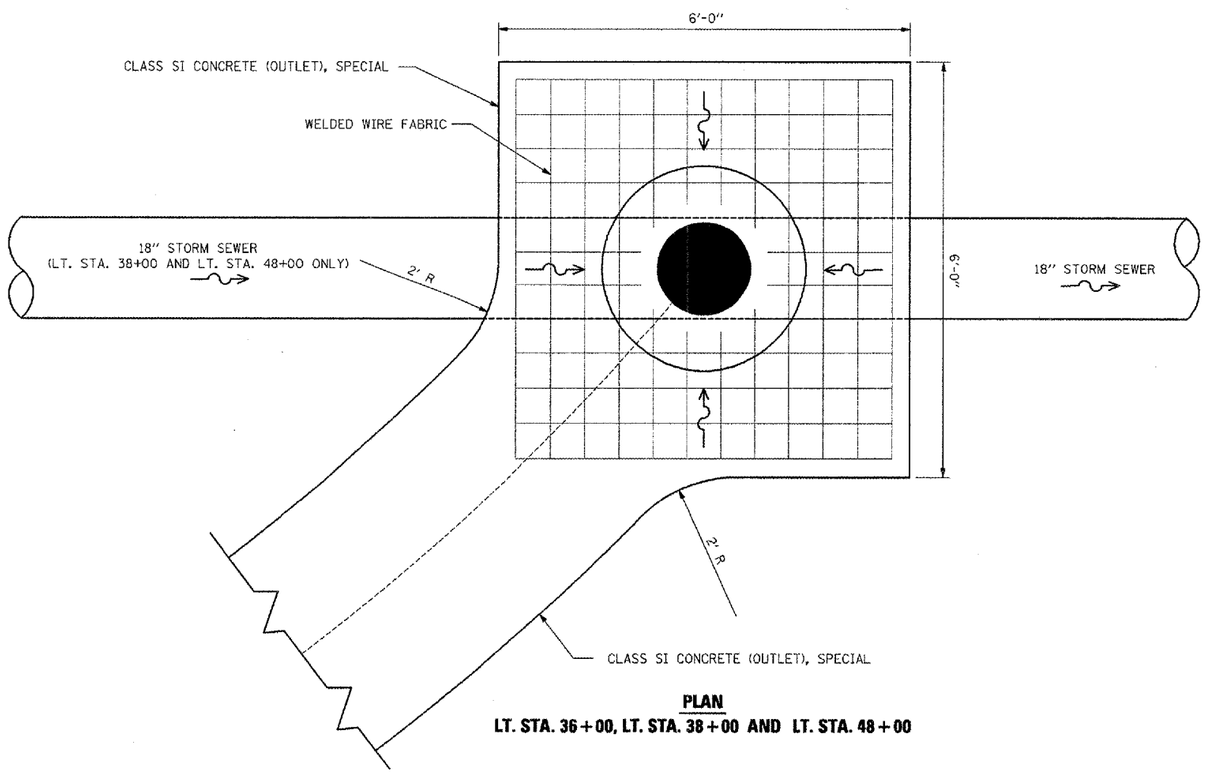

PLAN

LT. STA. 36+00, LT. STA. 38+00 AND LT. STA. 48+00

DETAIL – CLASS SI CONCRETE (OUTLET), SPECIAL

NOT TO SCALE

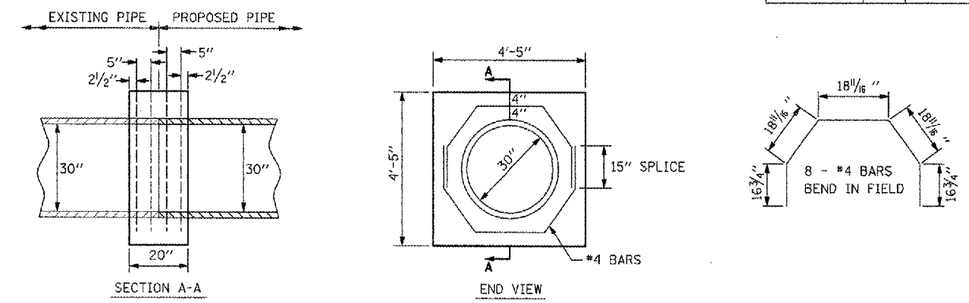

CLASS SI CONCRETE = 0.9 CY YD
REINFORCEMENT BARS = 40 POUND

DETAIL – CONCRETE COLLAR

RT. STA. 39+97.6
NOT TO SCALE

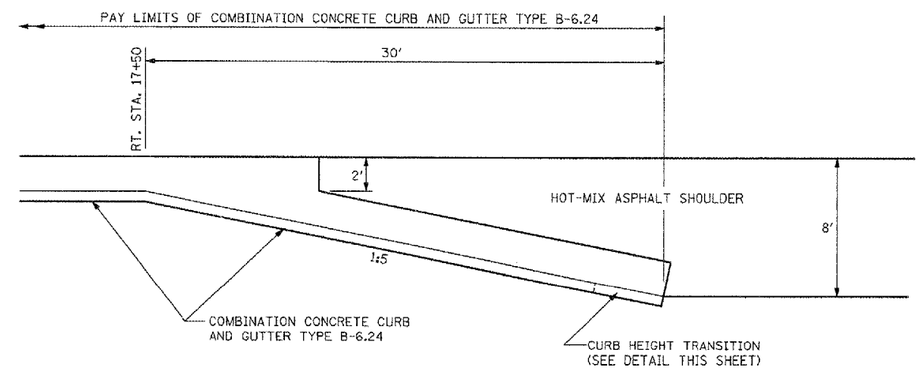

PLAN

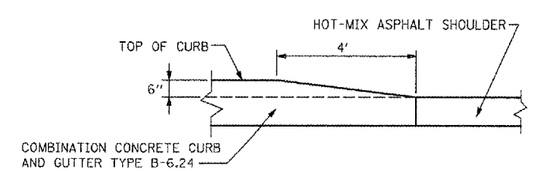

CURB HEIGHT TRANSITION DETAIL

DETAIL – CURB TRANSITION

NOT TO SCALE

REVISIONS	
NAME	DATE

ILLINOIS DEPARTMENT OF TRANSPORTATION

BROADWAY ROAD
DETAIL – CURB TRANSITION, CLASS SI CONCRETE (OUTLET), SPECIAL AND CONCRETE COLLAR

SCALE: AS SHOWN — DRAWN BY DLC
DATE 12/07/2007 — CHECKED BY REW

PLOT DATE = 2/8/2008
FILE NAME = I:\2006066679\dgn\plans\DTL-02 CL SI CONC OUTLT SPCL .dgn
PLOT SCALE = 1.00000 ' / IN.
USER NAME = IDOT

DTL-02 CL SI CONC OUTLT SPCL .dgn 2/8/2008 9:45:29 AM