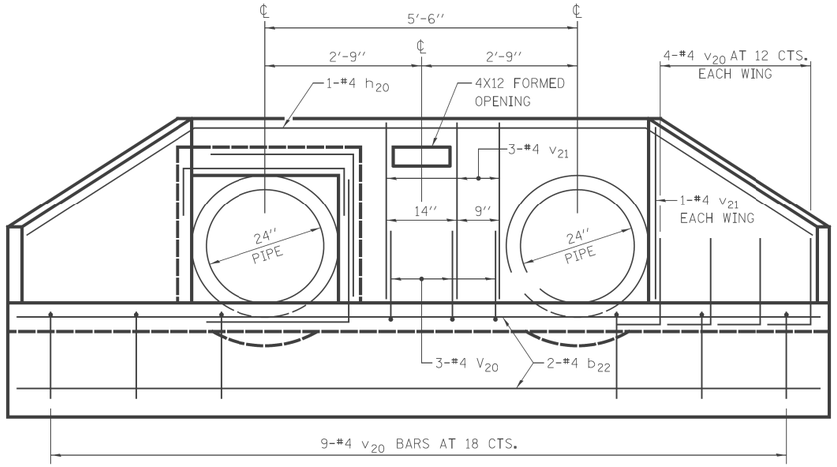

END VIEW

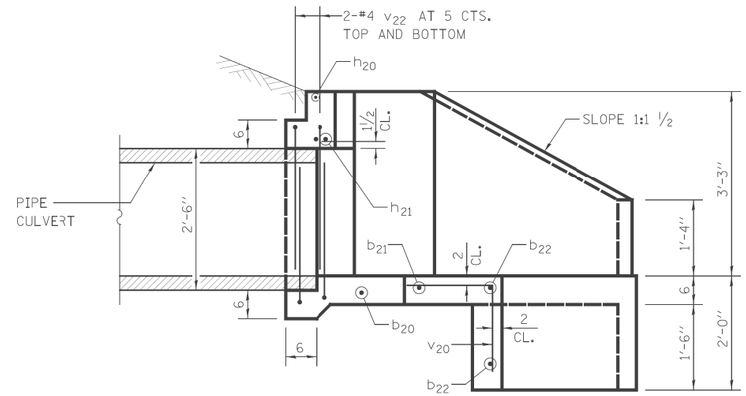

SECTION A–A

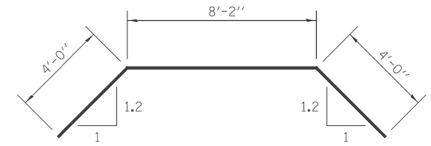

BAR h_{20}

BEND IN FIELD

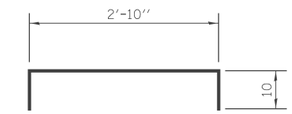

BAR h_{21}

BEND IN FIELD

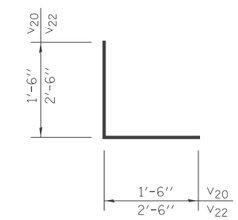

BARS v_{20} & v_{22}

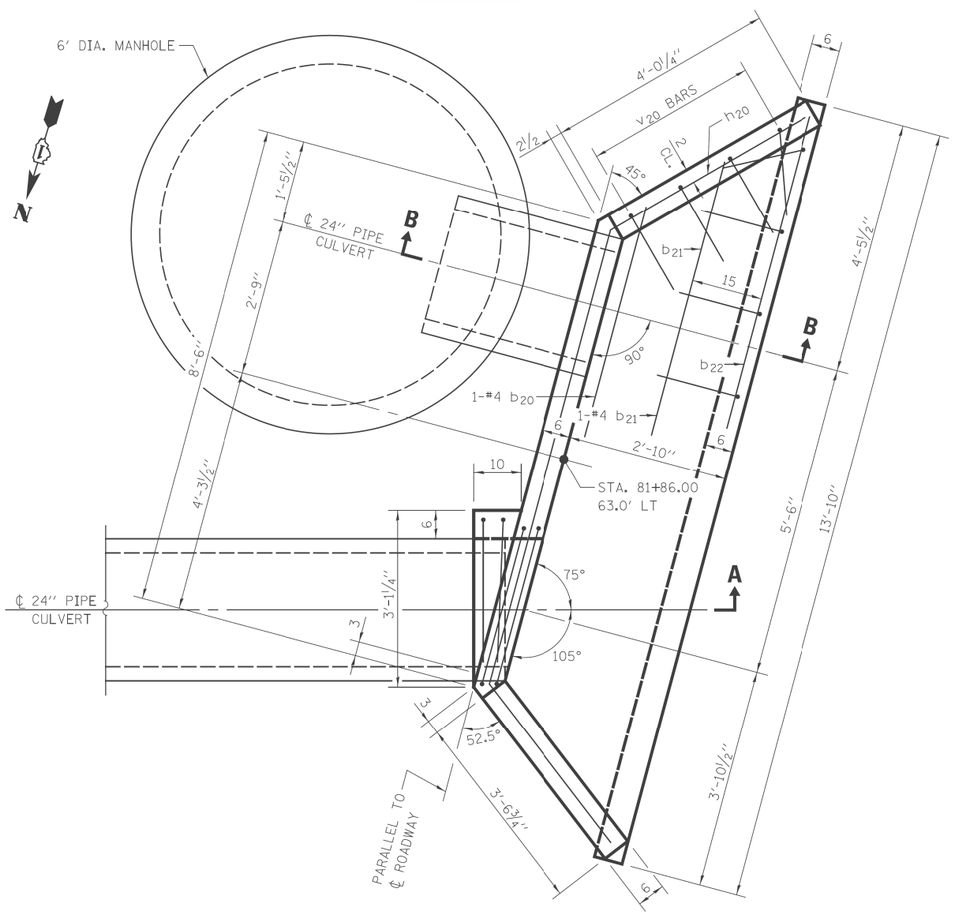

PLAN

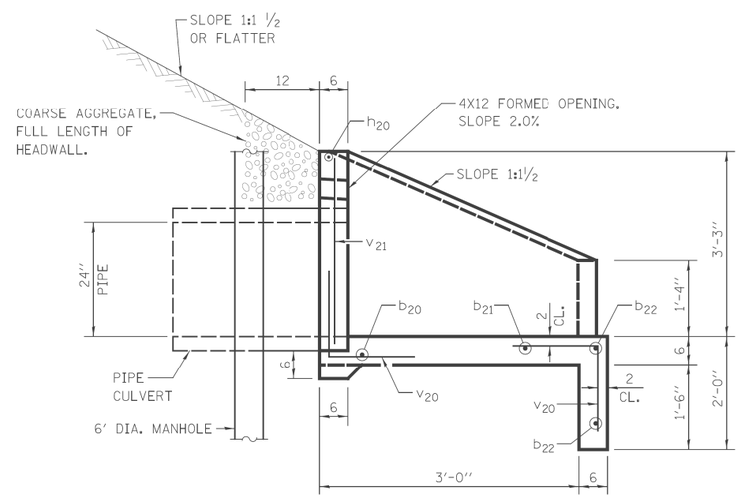

SECTION B–B

BILL OF MATERIALS

BAR	NO.	SIZE	LENGTH	SHAPE
b_{20}	1	#4	9'-3"	
b_{21}	1	#4	10'-9"	
b_{22}	2	#4	13'-3"	
h_{20}	1	#4	16'-2"	
h_{21}	2	#5	4'-6"	
v_{20}	20	#4	3'-0"	
v_{21}	5	#4	2'-11"	
v_{22}	4	#4	5'-0"	
REINFORCEMENT BARS			POUND	120
CONCRETE STRUCTURES			CU YD	2.1

GENERAL NOTES

SEE SHEET DU-46 FOR PIPE AND END SECTION INVERT ELEVATIONS.

BUILD TOPS OF HEADWALLS PARALLEL TO GRADE LINE.

ALL SLOPE RATIOS ARE EXPRESSED AS UNITS OF VERTICAL DISPLACEMENT TO UNITS OF HORIZONTAL DISPLACEMENT (V:H).

ALL DIMENSIONS ARE IN INCHES UNLESS OTHERWISE SHOWN.

SHEET 2 OF 2

DESIGNED - TB	REVISED -	
DRAWN - TB	REVISED -	
CHECKED - JRS	REVISED -	
DATE - 03/13/13	REVISED -	

STATE OF ILLINOIS
DEPARTMENT OF TRANSPORTATION

REINFORCED CONCRETE END SECTION
STA. 81+86

SCALE: NTS | SHEET NO. 2 OF 5 SHEETS | STA. | TO STA.

F.A. RTE.	SECTION	COUNTY	TOTAL SHEETS	SHEET NO.
330	103R-3	COOK	932	349
	DD-02	CONTRACT NO. 60F05		

ILLINOIS FED. AID PROJECT