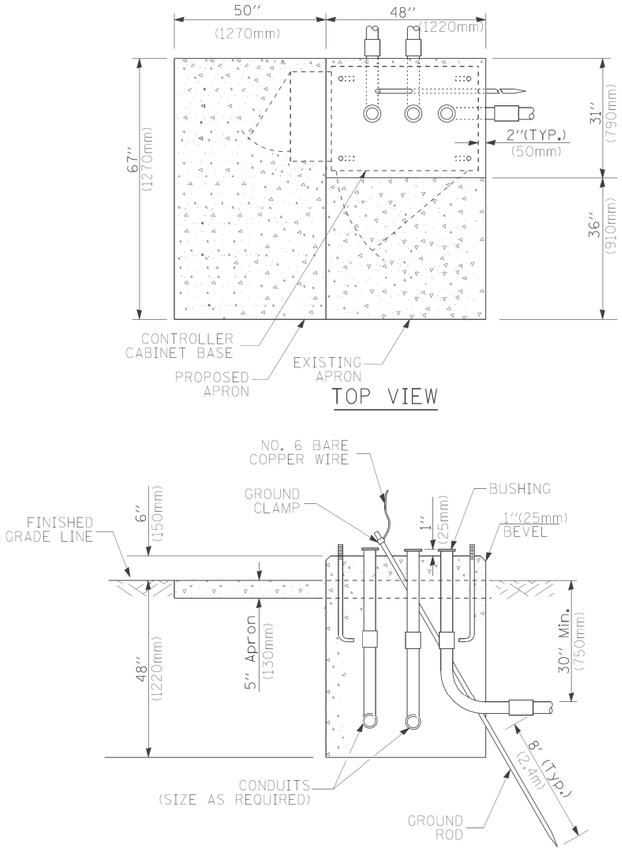


TYPE D
FOR GROUND MOUNTED
CONTROLLER CABINET
AND UPS BATTERY CABINET

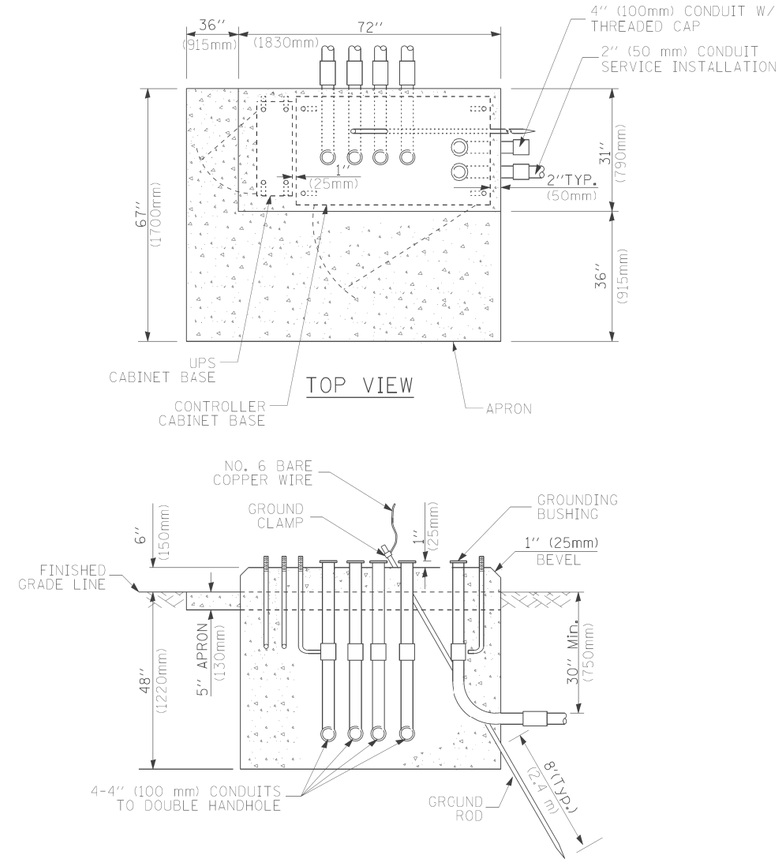


TYPE C
FOR GROUND MOUNTED
CONTROLLER CABINET
AND UPS BATTERY CABINET

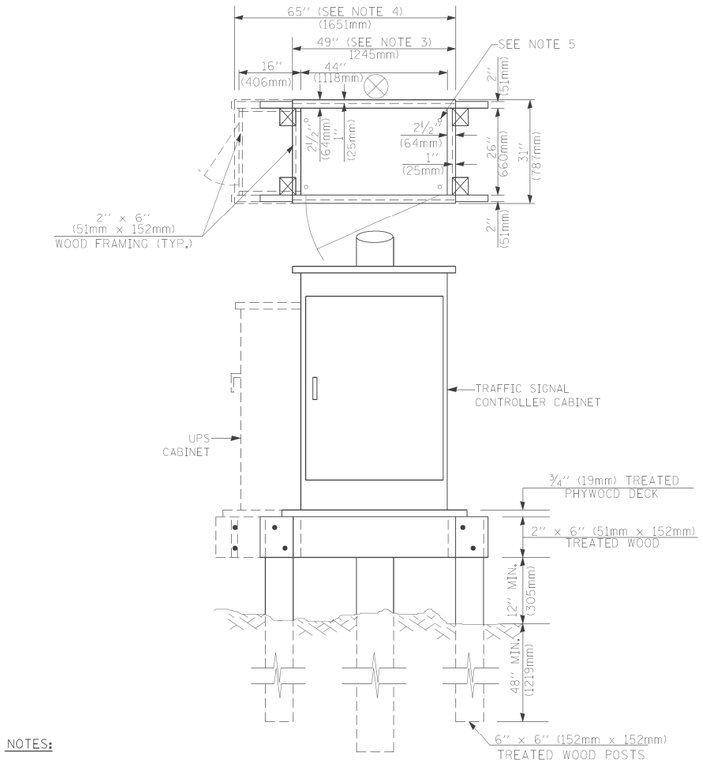


NOTES:

1. BASED ON CONTROLLER CABINET TYPE IV WITH BASE DIMENSIONS OF 26" x 44" (660mm x 1118mm). ADJUST PLATFORM SIZE TO FIT CABINET BASE DIMENSIONS BEING SUPPLIED.
2. BASED ON UNINTERRUPTIBLE POWER SUPPLY CABINET WITH BASE DIMENSIONS OF 16" x 25" (406mm x 635mm). ADJUST PLATFORM SIZE TO FIT CABINET BASE DIMENSIONS BEING SUPPLIED.
3. PLATFORM SIZE FOR CONTROLLER CABINET TYPE IV.
4. PLATFORM SIZE FOR CONTROLLER CABINET TYPE IV AND UNINTERRUPTIBLE POWER SUPPLY CABINET.
5. DRILLED HOLES THROUGH THE PLATFORM BASE TO MATCH THE CONTROLLER CABINET BOLT TEMPLATE. FASTEN THE CONTROLLER CABINET TO THE PLATFORM WITH CARRIAGE BOLTS, WASHERS AND NUTS.
6. FASTEN ALL SUPPORT WOOD FRAMING TO THE WOOD POSTS WITH 2 LAG SCREWS FOR EACH CONNECTION.

TEMPORARY SIGNAL CONTROLLER
WOOD SUPPORT PLATFORM

| CABLE SLACK LENGTH | FEET | METER |
|---|---|---|
| HANDHOLE | 6.5 | 2.0 |
| DOUBLE HANDHOLE | 13.0 | 4.0 |
| SIGNAL POST | 2.0 | 0.6 |
| MAST ARM | 2.0 | 0.6 |
| CONTROLLER CABINET | 1.5 | 0.5 |
| FIBER OPTIC AT CABINET | 13.0 | 4.0 |
| ELECTRIC SERVICE AT (CABINET OR SERVICE LOCATION) | 1.5 | 0.5 |
| GROUND CABLE (SIGNAL POST, MAST ARM, CABINET) | 1.5 | 0.5 |
| GROUND CABLE (BETWEEN FRAME AND COVER) | 5.0 | 1.6 |

CABLE SLACK

| VERTICAL CABLE LENGTH | FEET | METER |
|---|---|---|
| MAST ARM POLE ( MAST ARM MOUNTED SIGNAL HEAD) (L = MAST ARM LENGTH - DISTANCE TO SIGNAL HEAD FROM END OF ARM) | 20.0+L | 6.0+L |
| BRACKET MOUNTED (MAST ARM POLE OR SIGNAL POLE) | 13.0 | 4.0 |
| PEDESTRIAN PUSH BUTTON | 6.0 | 2.0 |
| SERVICE INSTALLATION POLE MOUNT TO SERVICE DROP | 13.5 | 4.1 |
| SERVICE INSTALLATION POLE MOUNT TO GROUND | 13.5 | 4.1 |
| SERVICE INSTALLATION GROUND MOUNT | 6.0 | 2.0 |
| FOUNDATION (SIGNAL POST, MAST ARM POLE, CONTROLLER CABINET, SERVICE-GROUND MOUNT) | 3.0 | 1.0 |

VERTICAL CABLE LENGTH

| FOUNDATION | DEPTH |
|---|---|
| TYPE A - Signal Post | 4'-0" (1.2m) |
| TYPE C - CONTROLLER W/ UPS | 4'-0" (1.2m) |
| TYPE D - CONTROLLER | 4'-0" (1.2m) |
| SERVICE INSTALLATION, GROUND MOUNT, TYPE A - SQUARE | 4'-0" (1.2m) |

DEPTH OF FOUNDATION

| Mast Arm Length | ① Foundation Depth | Foundation Diameter | Spiral Diameter | Quantity of Rebars | Size of Rebars |
|---|---|---|---|---|---|
| Less than 30' (9.1 m) | 10'-0" (3.0 m) | 30" (750mm) | 24" (600mm) | 8 | 6(19) |
| Greater than or equal to 30' (9.1 m) and less than 40' (12.2 m) | 13'-6" (4.1 m) | 30" (750mm) | 24" (600mm) | 8 | 6(19) |
| | 11'-0" (3.4 m) | 36" (900mm) | 30" (750mm) | 12 | 7(22) |
| Greater than or equal to 40' (12.2 m) and less than 50' (15.2 m) | 13'-0" (4.0 m) | 36" (900mm) | 30" (750mm) | 12 | 7(22) |
| Greater than or equal to 50' (15.2 m) and up to 55' (16.8 m) | 15'-0" (4.6 m) | 36" (900mm) | 30" (750mm) | 12 | 7(22) |
| Greater than or equal to 56' (16.8 m) and less than 65' (19.8 m) | 21'-0" (6.4 m) | 42" (1060mm) | 36" (900mm) | 16 | 8(25) |
| Greater than or equal to 65' (19.8 m) and up to 75' (22.9 m) | 25'-0" (7.6 m) | 42" (1060mm) | 36" (900mm) | 16 | 8(25) |

NOTES:

1. These foundation depths are for sites which have cohesive soils (clayey silt, sandy clay, etc.) along the length of the shaft, with an average Unconfined Compressive Strength (Qu) > 1.0 tsf (100 kpa). This strength shall be verified by boring data prior to construction or with testing by the Engineer during foundation drilling. The Bureau of Bridges & structures should be contacted for a revised design if other conditions are encountered.
2. Combination mast arm assemblies under 55 feet (16.8 m) shall use 36" (900 mm) diameter foundations.
3. Combination mast arm assemblies under 56 feet (16.8 m) through 75 feet (22.9 m) shall use 42" (1060 mm) diameter foundations.
4. For mast arm assemblies with dual arms refer to state standard 878001.

DEPTH OF MAST ARM FOUNDATIONS, TYPE E