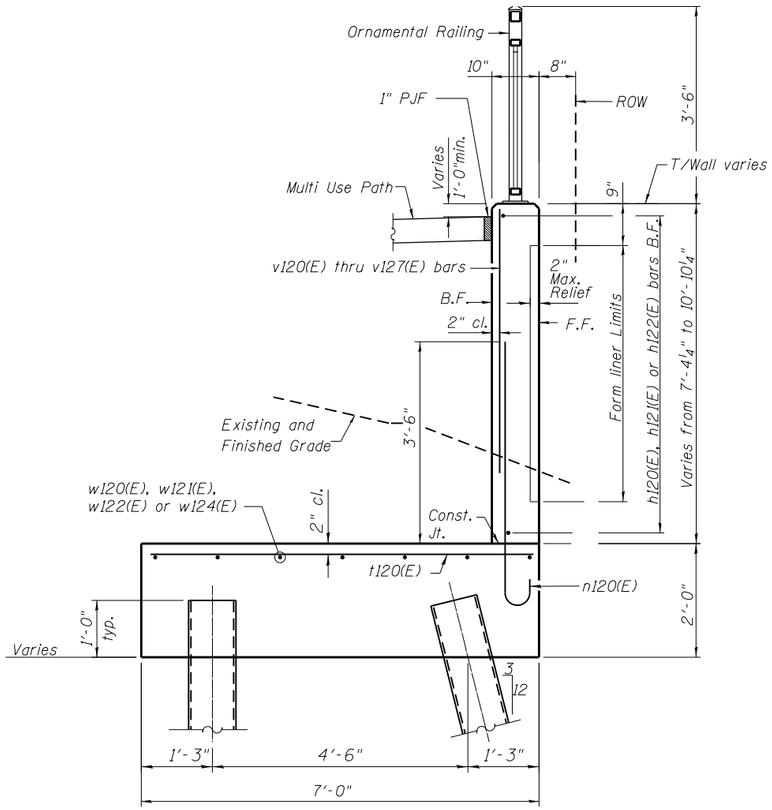

TYPICAL SECTION THRU WALL

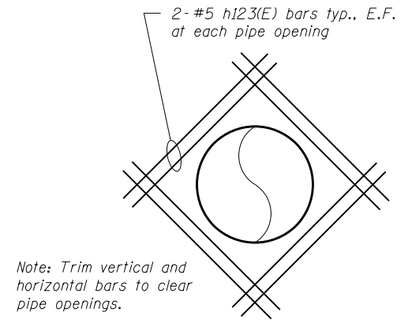

PIPE PENETRATION DETAIL

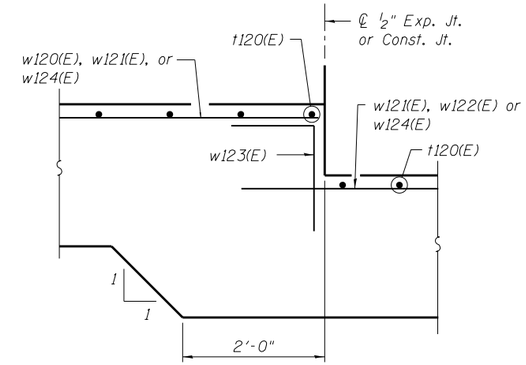

DETAIL 1

BILL OF MATERIAL

Bar	No.	Size	Length	Shape
h120(E)	40	#5	29'-8"	
h121(E)	95	#5	33'-1"	
h122(E)	11	#5	9'-2"	
h123(E)	32	#5	3'-8"	
n120(E)	868	#6	5'-11"	
v120(E)	31	#5	6'-9"	
v121(E)	92	#5	6'-10"	
v122(E)	43	#5	7'-2"	
v123(E)	31	#5	7'-6"	
v124(E)	62	#5	7'-9"	
v125(E)	31	#5	8'-2"	
v126(E)	70	#5	8'-9"	
v127(E)	31	#5	9'-2"	
t120(E)	435	#6	7'-8"	
w120(E)	16	#5	31'-6"	
w121(E)	72	#5	32'-4"	
w122(E)	16	#5	36'-1"	
w123(E)	32	#5	4'-8"	
w124(E)	8	#5	35'-10"	
Structure Excavation			Cu. Yd.	1.261
Concrete Structures			Cu. Yd.	333.1
Form Liner Textured Surface			Sq. Ft.	1,699
Reinforcement Bars, Epoxy Coated			Pound	24,620
Furnishing Metal Shell Piles 12" x 0.179"			Foot	3,392
Driving Piles			Foot	3,392
Test Pile Metal Shells			Each	4
Geocomposite Wall Drain			Sq. Yd.	305
Lightweight Cellular Concrete Fill			Cu. Yd.	1,600
Granular Backfill for Structures			Cu. Yd.	407
Ornamental Railing			Foot	430
Pipe Underdrains for Structures 4"			Foot	430

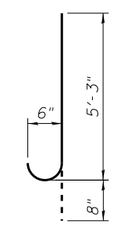

BAR n120(E)

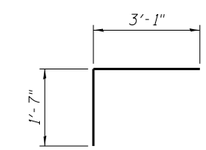

BAR w123(E)

PILE DATA

(Sta. 122+88.00 to 123+13.50 and Sta. 125+19.50 to 126+73.50)

Type : 12"ϕ Metal Shell Piles
Nominal Required Bearing: 120 kips
Allowable Resistance Available: 40 kips
Est. Length: 24 ft
No. Test Piles: 2

PILE DATA

(Sta. 123+13.50 to 125+19.50 and Sta. 126+73.50 to 128+00.00)

Type : 12"ϕ Metal Shell Piles
Nominal Required Bearing: 120 kips
Allowable Resistance Available: 40 kips
Est. Length: 18 ft
No. Test Piles: 2

Notes:
Wall stations, offsets and dimensions are measured at front face of wall.
All exposed corners shall have a 1" chamfer.
For General Notes, Wall Key Plan and US 45 Profile, see Sheet 1.
For Typical Wall Details and Ornamental Railing see Sheet 2.

URS
100 S. WACKER DR.
SUITE 500
CHICAGO IL 60606
TEL (312)939-1000
FAX (312)939-4189

FILE NAME = D160F05-SHT-Wall_12-7.dgn	USER NAME = Anthony.Plutz	DESIGNED -	REVISED -
		CHECKED -	REVISED -
	PLOT SCALE = 32.000 ' / in.	DRAWN -	REVISED -
	PLOT DATE = 3/12/2013	CHECKED -	REVISED -

STATE OF ILLINOIS
DEPARTMENT OF TRANSPORTATION

RETAINING WALL NO. 12 – S.N. 016–Z026
STA. 122+88.00 TO 127+19.00

SHEET NO. 21 OF 41 SHEETS

F.A.P RTE.	SECTION	COUNTY	TOTAL SHEETS	SHEET NO.
330	103R-3	COOK	932	576
		CONTRACT NO. 60F05		
	ILLINOIS	FED. AID PROJECT		