COUNTY HIGHWAY	FISCAL YEAR	SHEET NUMBER	TOTAL SHEETS

SECTION: _____

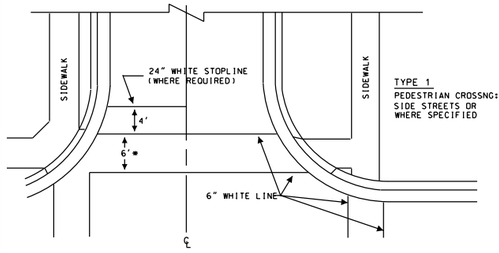

TYPE 1
PEDESTRIAN CROSSNG: SIDE STREETS OR WHERE SPECIFIED

*THIS DIMENSION SHOULD BE INCREASED WHERE SIDEWALK WIDTHS WARRENT.

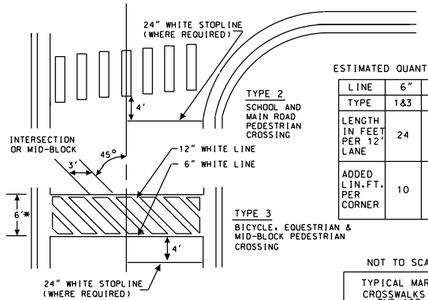

TYPE 2
SCHOOL AND MAIN ROAD PEDESTRIAN CROSSING

TYPE 3
BICYCLE, EQUESTRIAN & MID-BLOCK PEDESTRIAN CROSSING

ESTIMATED QUANTITIES:

LINE	6"	12"
TYPE	1&3	2&3
LENGTH IN FEET PER 12' LANE	24	24
ADDED LIN.FT. PER CORNER	10	6

NOT TO SCALE:

TYPICAL MARKING CROSSWALKS
TMD-107-2

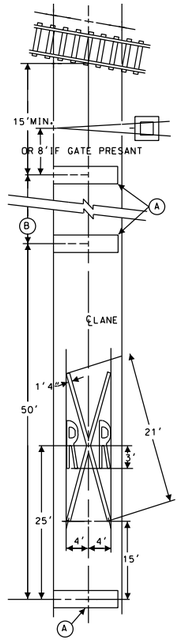

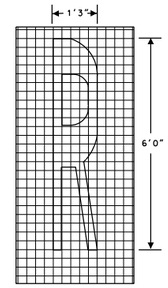

GRID SCALE:
THE SIDE OF EACH SQUARE = 3"

ALL MARKING SHALL BE WHITE.

2'0"x WIDTH OF THE LANE (S) PAID FOR AS ...LINE - 24".THE BANDS SHALL EXTEND ACROSS ALL APROACH LANES WITH SEPARATE "RXR"SYMBOLS IN EACH LANE.

POSTED SPEED(MPH)	35	40	45	50	55
DISIRED	200	300	400	500	600
MINIMUM	50	150	300	400	600

OR AS LOCATED ON THE PLANS OR AS DERECTED BY THE ENGINEER.

EACH "R"= 3.6 SQ.FT. "X"= 54 SQ.FT.

PAID FOR AS LETTERS AND SYMBOLS, 61.2 SQ.FT. PER EACH APPROACH LANE.

NOT TO SCALE:

APPROACH MARKING RAILROAD GRADE CROSSING
TMD-108-3

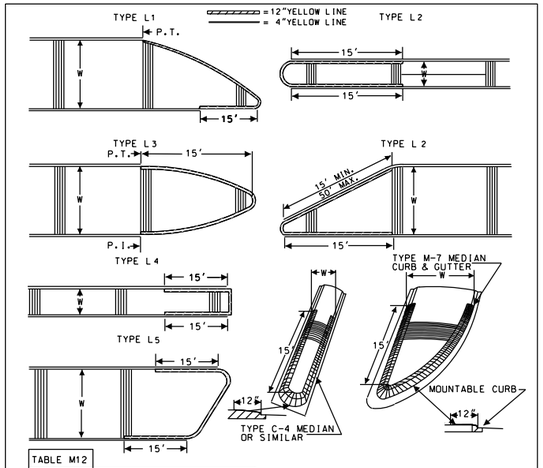

TABLE M12

TOTAL APPROXIMATE LENGTH IN FEET FOR 12"YELLOW LINE

TYPE	W	2'	4'	6'	8'	10'	12'	14'	16'
	L1	-	-	-	40	45	50	55	60
	L2	31	35	38	41	44	45	49	58
	L3	-	-	-	36	41	45	49	58
	L4	32	34	36	38	-	-	-	-
	L5	-	-	37	40	43	46	48	51

TWO WAY TRAFFIC:

NOT TO SCALE:

MOUNTABLE MEDIANS TYPICAL NOSE MARKING
TMD-109-3

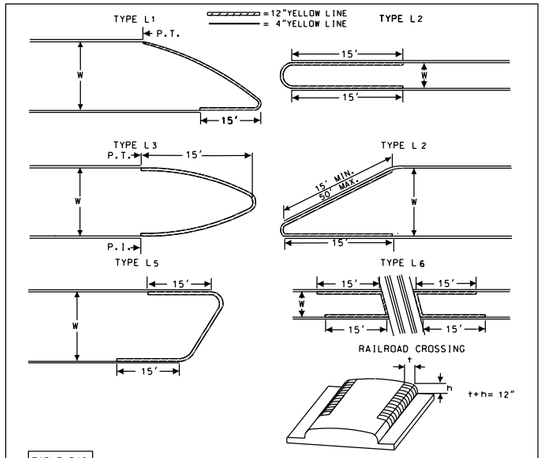

TABLE B12

TOTAL APPROXIMATE LENGTH IN FEET FOR 12"YELLOW LINE

TYPE	W	2'	4'	6'	8'	10'	12'	14'	16'
	L1	-	-	-	40	45	50	55	60
	L2	31	35	38	41	44	49	50	54
	L3	-	-	-	36	41	45	49	58
	L5	-	-	37	40	43	46	48	51
	L	-	-	36	38	40	42	44	46

EACH APPROACH

TWO WAY TRAFFIC:

NOT TO SCALE:

BARRIER MEDIANS TYPICAL NOSE MARKING
TMD-110-2

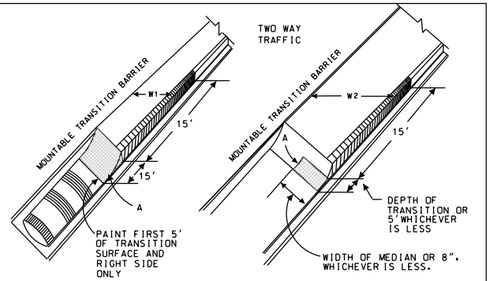

MOUNTABLE TO BARRIER MEDIANS TYPICAL TRANSITION:

12"YELLOW LINE
YELLOW MEDIAN
4"YELLOW LINE
12"OR 6"WHITE LINE

APPROXAMATE AREA IN SQUARE F.T. FOR PAINTED YELLOW MEDIAN (A)

	W1				W2
	2'	4'	6'	8'	8'-16'
(A)	11.3	21.3	31.3	41.3	41.3

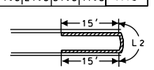

SEE TABLE M12 B12 OR

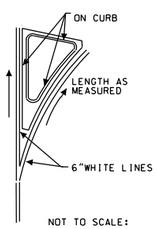

GENERAL NOTE:

SPECIAL CONDITIONS NOT SHOWN ON THESE STANDARDS SHALL BE MARKED IN ACCORDANCE WITH PLANES SUBMITTED FOR THE SPECIFIC LOCATION.WHERE PLANS ARE NOT AVAILABLE. THE MARKINGS SHALL BE IN ACCORDANCE WITH THE APPLICABLE PORTIONS IN PART III OF THE 1988 EDITION OF THE MANUAL ON UNIFORM TRAFFIC CONTROL DEVICES.THE MARCH.1990 ILLINIOS SUPLEMENT TO THE MANUAL AND AS SPECIFIED BY THE TRAFFIC ENGINEER.

NOT TO SCALE:

BARRIER ISLANDS TYPICAL MARKINGS
TMD-111-3

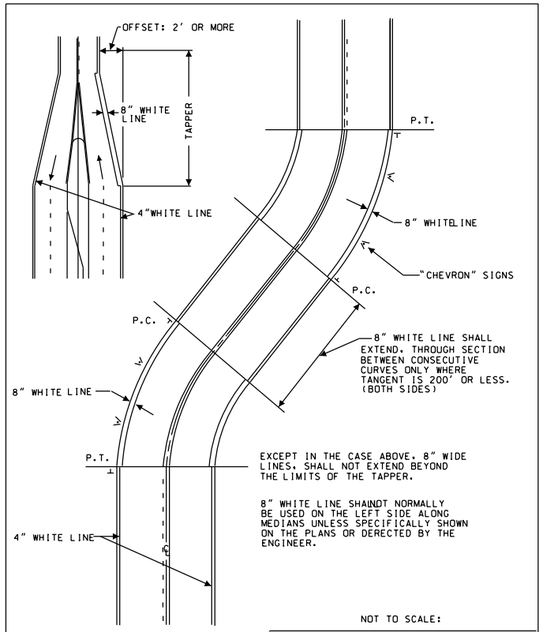

NOT TO SCALE:

TYPICAL MARKING EDGELINE ALONG CURVES AND LANE REDUCTIONS
TMD- 112-3

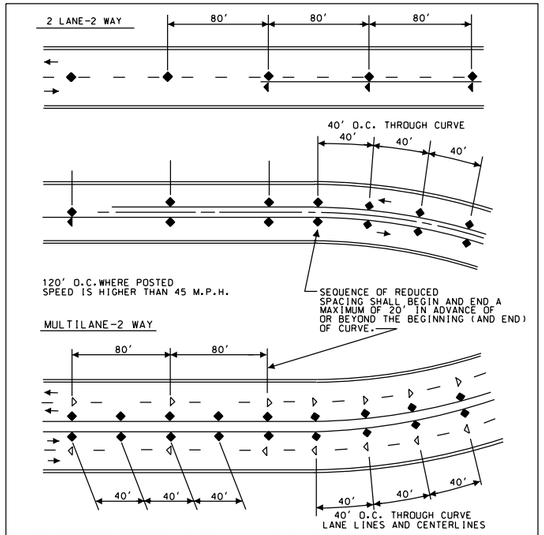

UNLESS OTHERWISE DIRECTED.MARKERS SHALL NOT BE USED ADJACENT TO A RAISED MEDIAN.

NOTES: MARKERS SHALL BE OFFSET 2" TO 3" FROM ADJACENT LINE MMARKING.

MARKERS SHALL BE LOCATED IN THE CENTER OF THE GAP BETWEEN SEGMENTS OF SKIP- DASH LINES.

MARKER SYMBOLS:
◀ ONE-WAY YELLOW
◆ TWO-WAY YELLOW
◁ ONE-WAY WHITE

NOT TO SCALE:

TYPICAL APPLICATION RAISED REFLECTIVE PAVEMENT MARKERS
TMD-113A-1

TYPICAL APPROACH TO CHANNELIZED MEDIANS
(WHEN SPECIFIED)

NOT TO SCALE:

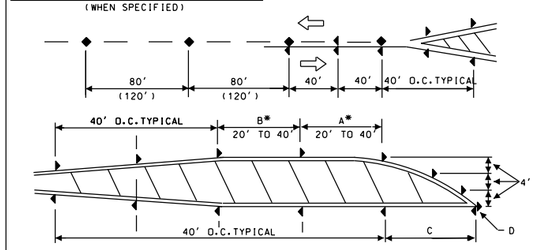

* ADJUSTMENTS TO THE NORMAL 40' O.C.SEQUENCE SHALL BE ACCOMPLISHED ONLY WITHIN A*AND B*AS SHOWN ABOVE. DEMENSION B*MUST BE EQUAL TO OR LONGER THAN DIMENSION A*. MARKER D SHALL BE OMITTED IF DIMENSION C IS LESS THAN 40'.

NOTE: NOT MORE THAN TWO MAKERS ON ETHER SIDE SHALL BE USED ADJACENT TO A CONTINUOUS RAISED MEDIAN IN ADVANCE OF OR BEYOND THE TAPERED SECTION.

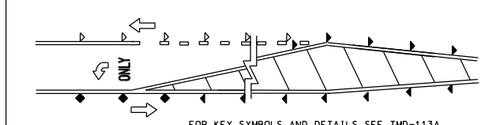

FOR KEY SYMBOLS AND DETAILS SEE TMD-113A.

NOT TO SCALE:

PAINTED CHANNELIZED

TYPICAL APPLICATION RAISED REFLECTIVE PAVEMENT MARKERS
TMD-113B-2

COUNTY OF COOK
DEPARTMENT OF HIGHWAYS
BUREAU OF TRANSPORTATION & PLANNING

PERMANENT PAVEMENT MARKING STANDARDS
(SHEET 2 OF 2)

COMPUTED: MAL
DRAWN: MAL
CHECKED: _____

URS
100 S. WACKER DR.
SUITE 500
CHICAGO IL 60606
TEL (312)939-1000
FAX (312)939-4198

FILE NAME =	USER NAME = Anthony_Plutz	DESIGNED - BA	REVISED -
D160F05-SHT-CCHDSTANDARD03.dgn		DRAWN - BA	REVISED -
	PLOT SCALE = 200.0001 ' / in.	CHECKED -	REVISED -
SHT_PLAN	PLOT DATE = 3/12/2013	DATE - 03/13/13	REVISED -

STATE OF ILLINOIS
DEPARTMENT OF TRANSPORTATION

COOK COUNTY HIGHWAY DEPARTMENT
STANDARD DRAWINGS

SCALE: N.T.S. | SHEET OF SHEETS | STA. TO STA.

F.A.P RTE.	SECTION	COUNTY	TOTAL SHEETS	SHEET NO.
330	103R-3	COOK	932	615
	CCHD-03	CONTRACT NO. 60F05		
		ILLINOIS FED. AID PROJECT		