DETAILS OF MAILBOX TURNOUTS

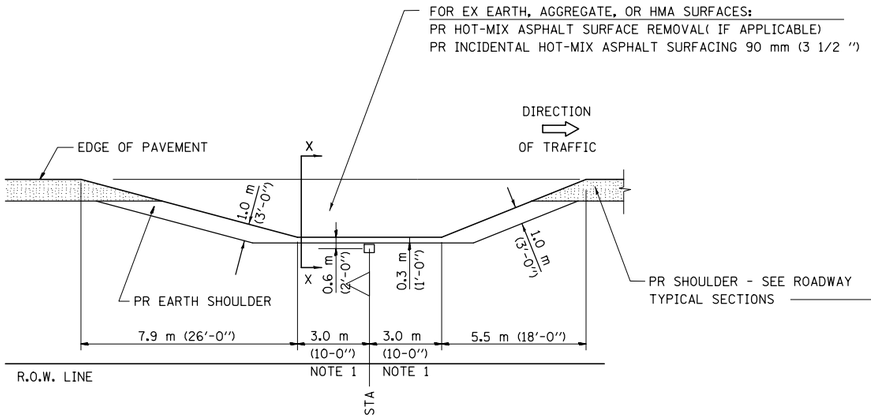

PLAN - MAILBOX TURNOUTS

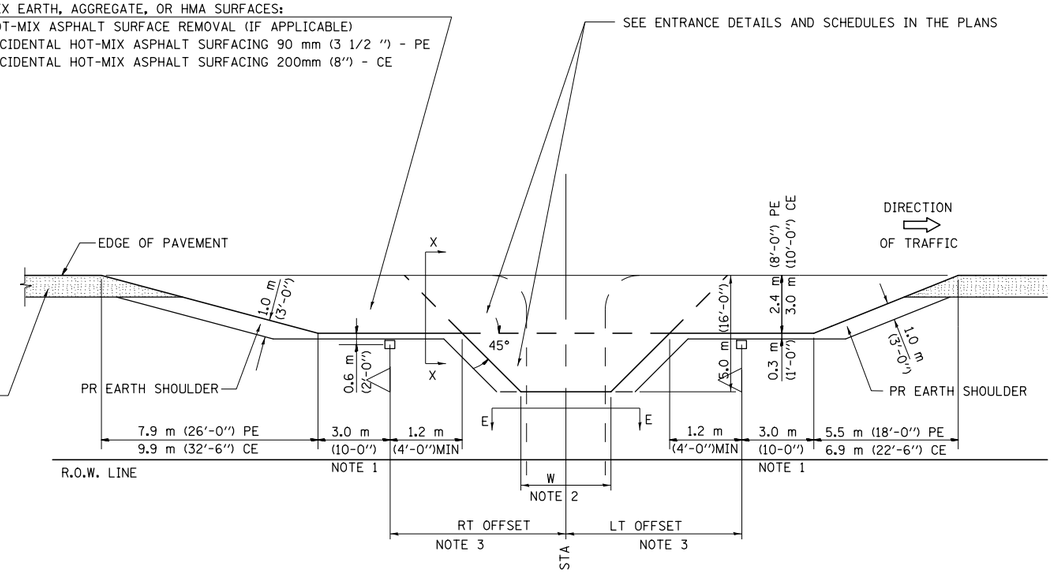

PLAN - COMBINED MAILBOX TURNOUT WITH TRAILING OR LEADING ENTRANCE

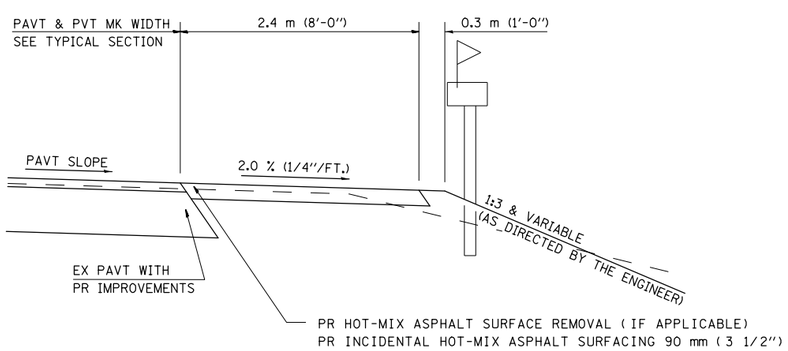

SECTION X-X THRU MAILBOX TURNOUT
ALSO APPLIES TO MAILBOX TURNOUTS COMBINED WITH
EX EARTH, AGGREGATE, OR HMA PE & FE

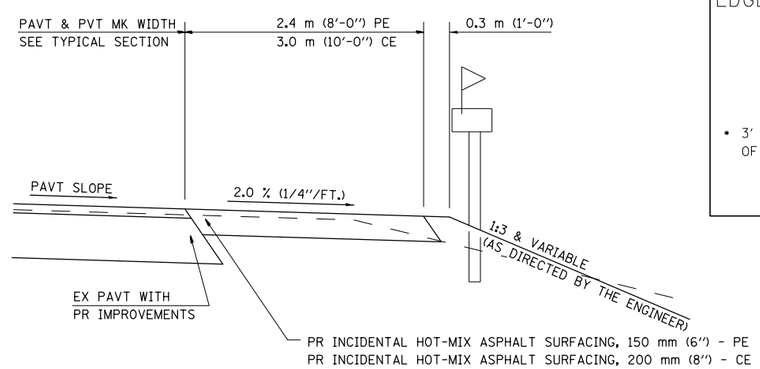

SECTION X-X THRU MAILBOX TURNOUT
COMBINED WITH EX HMA & PC CONC PE & CE

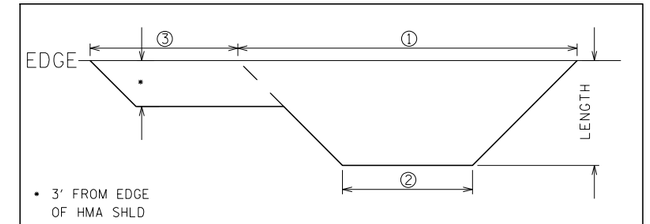

DIMENSIONS REFERENCED IN SCHEDULE

NOTE 1 IF MORE THAN ONE MAILBOX IS PRESENT, DIMENSION FROM CENTER OF END MAILBOX.

NOTE 2 FOR ENTRANCE LAYOUT DIMENSIONS AND SECTIONS A-A & E-E REFER TO THE SCHEDULES IN THE PLANS.

NOTE 3 BOTH LT OR RT OFFSETS FOR MAILBOX SHOWN USE OFFSET DIMENSION PER SCHEDULE AND REFER TO LAYOUT SHOWN ON THE PLAN.

ALL DIMENSIONS ARE IN INCHES
UNLESS OTHERWISE SHOWN.

FILE NAME = $FILEL$	USER NAME = $USER$	DESIGNED - JCN	REVISED -	STATE OF ILLINOIS DEPARTMENT OF TRANSPORTATION	DETAILS FOR ENTRANCE, MAILBOX TURNOUT & SIDE ROAD	F.A.S. RTE.	SECTION	COUNTY	TOTAL SHEETS	SHEET NO.
		DRAWN - CAD	REVISED -			2600	17RS-6 & 18RS-12	PIKE	32	31
ENT PPP.DGN	PLOT SCALE = $SCALE$	CHECKED - JCN	REVISED -					CONTRACT NO. 72D77		
	PLOT DATE = $DATE$	DATE - 2/23/99	REVISED -		SCALE: SHEET NO. 2 OF 2 SHEETS STA. TO STA.	FED. ROAD DIST. NO.	ILLINOIS	FED. AID PROJECT		