STATE OF ILLINOIS
DEPARTMENT OF TRANSPORTATION

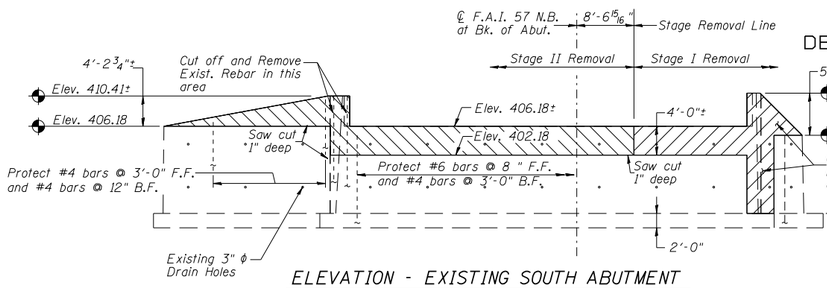

ELEVATION - EXISTING SOUTH ABUTMENT
(S.N. 100-0010)
LOOKING SOUTHWEST

Note: Existing reinforcement (protected) extending out of existing abutments shall be cleaned and incoporated into new construction. Cost included with Concrete Removal.

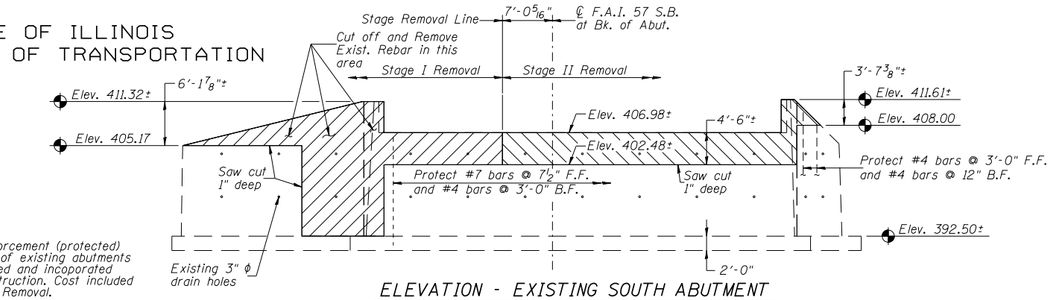

ELEVATION - EXISTING SOUTH ABUTMENT
(S.N. 100-0011)
LOOKING SOUTHWEST

Indicates existing concrete removal

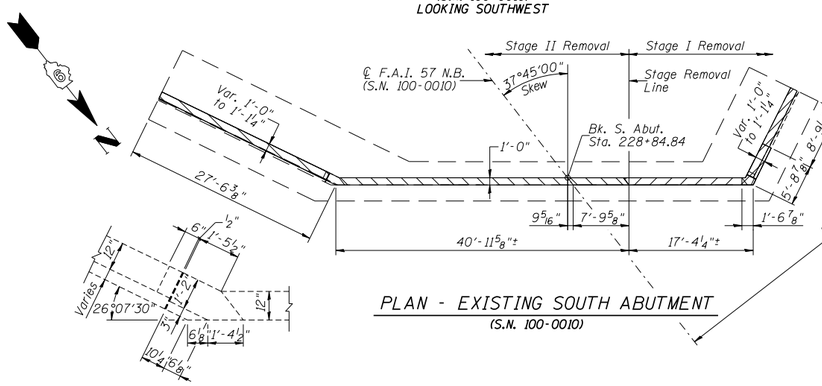

PLAN - EXISTING SOUTH ABUTMENT
(S.N. 100-0010)

CORNER DETAIL

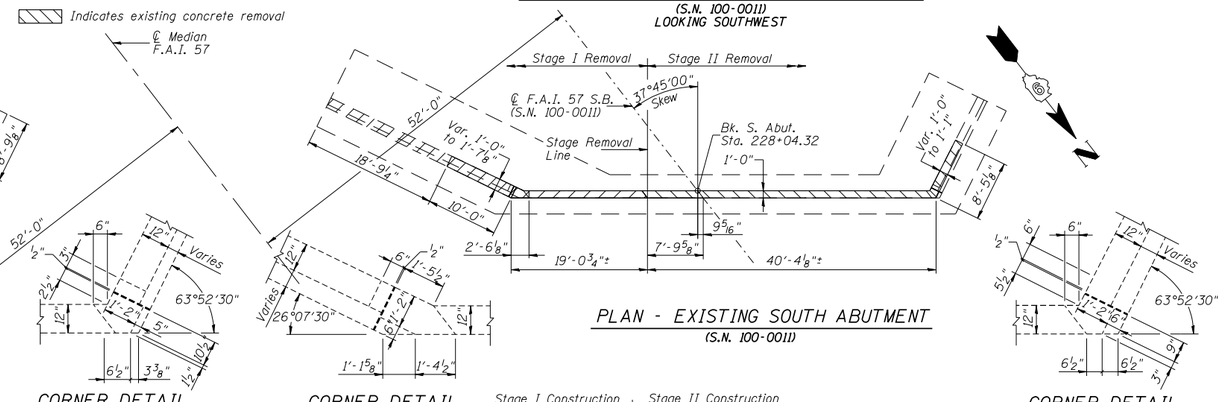

PLAN - EXISTING SOUTH ABUTMENT
(S.N. 100-0011)

CORNER DETAIL

CORNER DETAIL

CORNER DETAIL

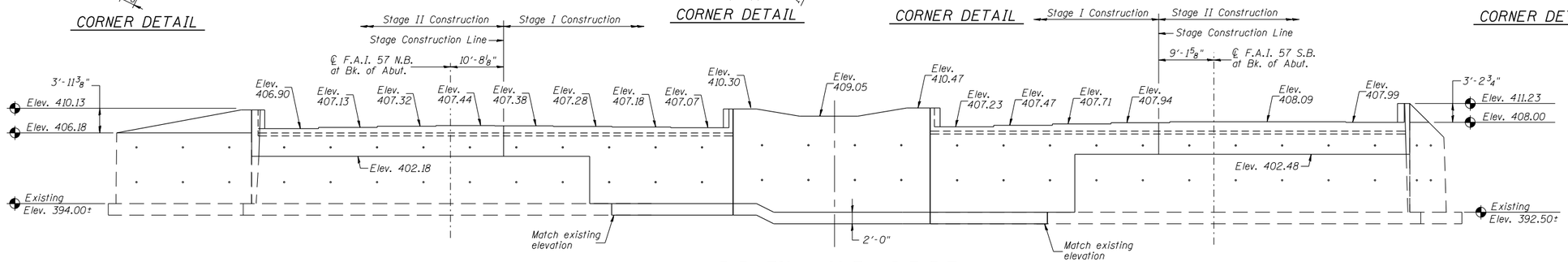

ELEVATION - SOUTH ABUTMENT

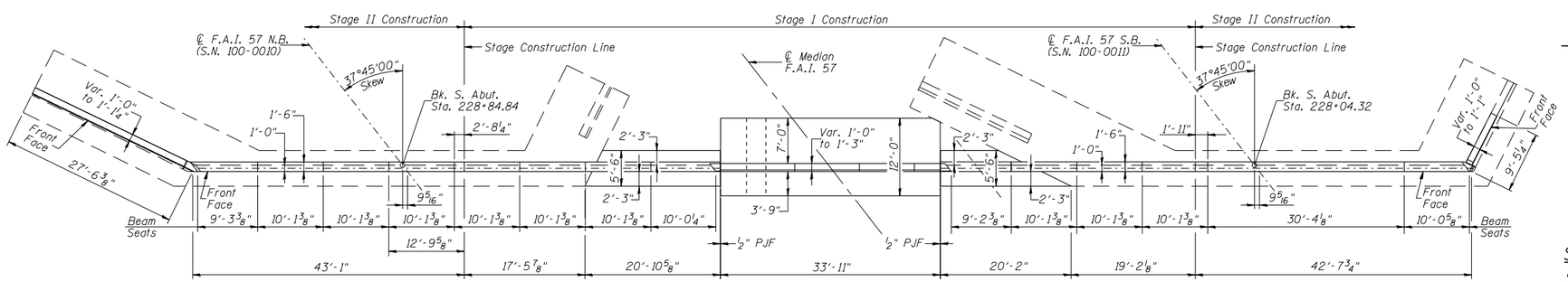

PLAN - SOUTH ABUTMENT

NOTES:

1. Backfill shall be placed behind the abutment after the Superstructure has been poured and falsework removed. See Article 502.10 of the Standard Specifications.

SOUTH ABUTMENT 1
F.A.I. RTE. 57 OVER
LAKE CREEK BRANCH
STATION 228+25.00
STRUCTURE NO. 100-0010 (N.B.)
STRUCTURE NO. 100-0011 (S.B.)

CMT
CRAWFORD MURPHY & TILLY, INC.
CONSULTING ENGINEERS
SPRINGFIELD, IL ■ AURORA, IL ■ ST. LOUIS, MO
ROCKFORD, IL ■ PEORIA, IL ■ CHICAGO, IL

DESIGNED BY: | DRAWN BY: GLD
CHECKED BY: WLB | DATE: 4/12/10

SHEET NO. 23
29 SHEETS

F.A.S. RTE.	SECTION	COUNTY	TOTAL SHEETS	SHEET NO.
I-57	(X1-4-1) BR -1	WILLIAMSON	202	106
		CONTRACT NO. 78334		
FED. ROAD DIST. NO. 9	ILLINOIS	FED. AID PROJECT		