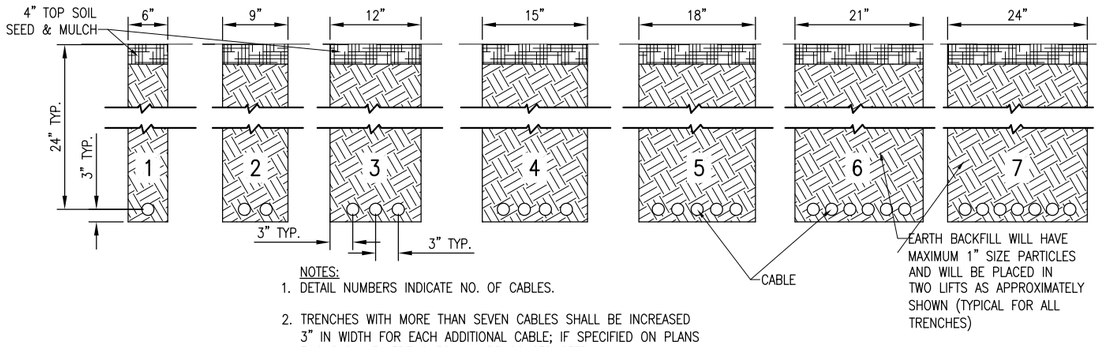

NOTES:

1. DETAIL NUMBERS INDICATE NO. OF CABLES.
2. TRENCHES WITH MORE THAN SEVEN CABLES SHALL BE INCREASED 3" IN WIDTH FOR EACH ADDITIONAL CABLE; IF SPECIFIED ON PLANS TWO PARALLEL TRENCHES MAY BE CONSTRUCTED.
3. DEPTH OF TRENCHES SHALL BE AS SHOWN ABOVE UNLESS OTHERWISE SPECIFIED ON THE PLANS.
4. ALL DISTURBED SURFACES SHALL BE RESTORED TO THEIR ORIGINAL CONDITION. COST IS INCIDENTAL TO TRENCH.

CABLE TRENCHES

(NOT TO SCALE)

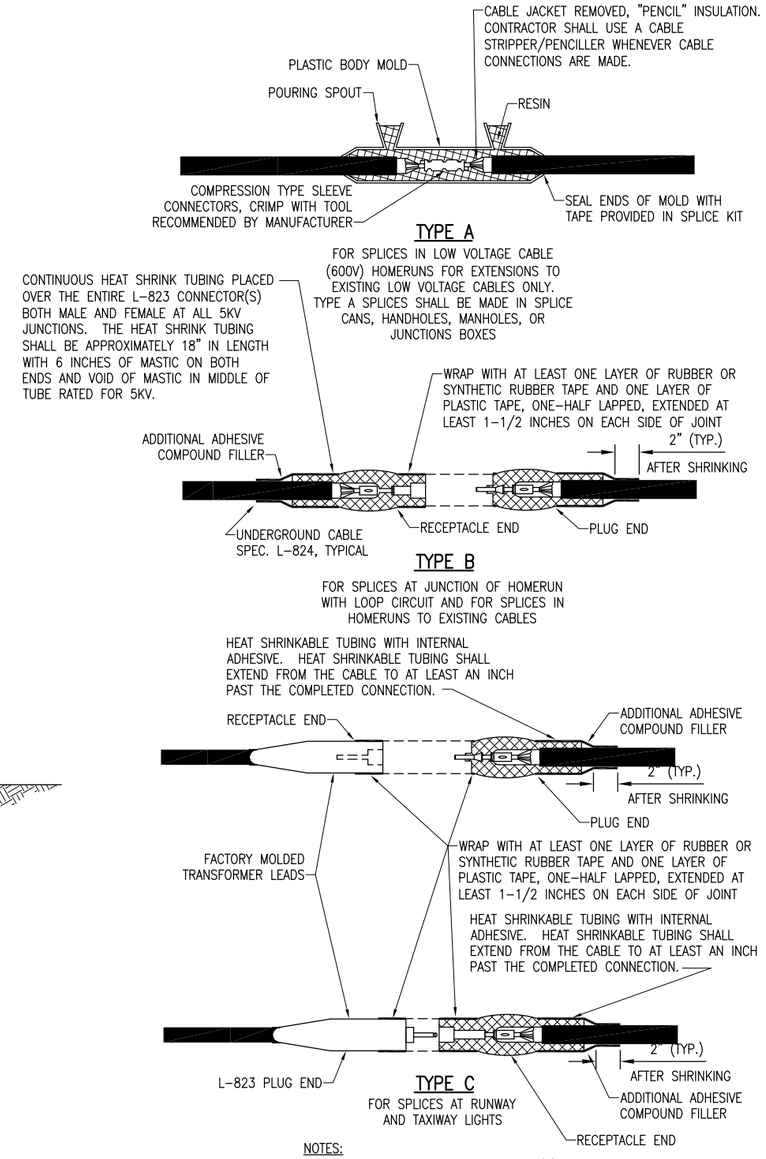

TYPE C

FOR SPLICES AT RUNWAY AND TAXIWAY LIGHTS

NOTES:

SEE PROPOSED LIGHTING LAYOUT SHEET(S) FOR SPLICE TYPE.

INSIDE DIAMETER OF CONNECTOR SHALL PROPERLY MATCH THE OUTSIDE DIAMETER OF CABLE.

CABLE SPLICES

(NOT TO SCALE)

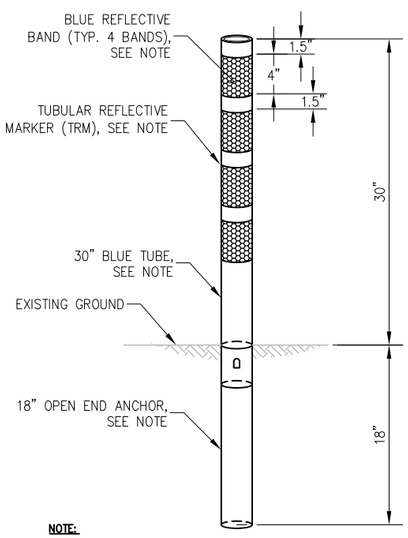

NOTE:

1. TUBULAR REFLECTIVE MARKER (TRM) SHALL COMPLY WITH FAA AC 150\5345-39.
2. TUBULAR REFLECTIVE MARKER TO BE INSTALLED PER MANUFACTURER'S INSTRUCTION.

TAXIWAY REFLECTIVE MARKER (TRM)

(NOT TO SCALE)

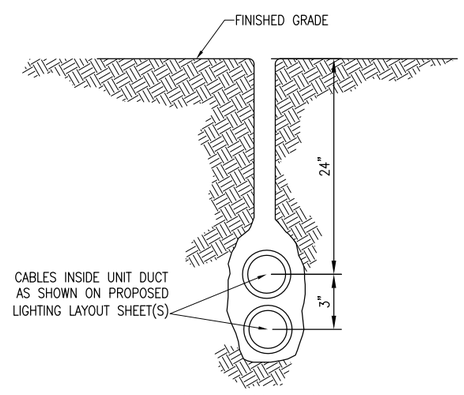

PLOWED CABLE

(NOT TO SCALE)

REVISION	DATE

MT. VERNON AIRPORT
MT. VERNON, ILLINOIS

IL. PROJ.: MVN-4197 SBG PROJ.: 3-17-0074-B27

Hanson Project No. 12A0044D
Filename 27_E-500-ELEC.DWG
Scale N/A
Date 3/1/13

LAYOUT	LDH	12/18/12
DRAWN	LDH	12/18/12
REVIEWED	BSS	2/21/13

HANSON

© Copyright Hanson Professional Services Inc. 2013
Hanson Professional Services Inc.
1525 South Sixth Street
Springfield, Illinois 62703-2886

CONSTRUCT APRON AND TAXIWAY IN SOUTH FRONTAL AREA

ELECTRICAL DETAILS

FEB 20, 2013 2:27 PM HAUSM00682