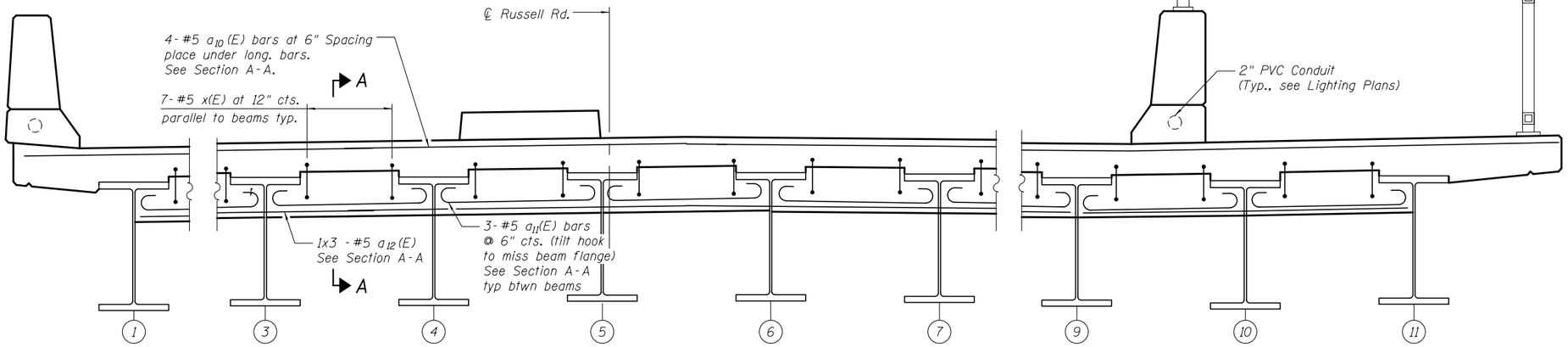

EDGE BEAM ELEVATION

(Looking East at E. Abut. Edge Beam; W. Abut. Edge Beam, similar)

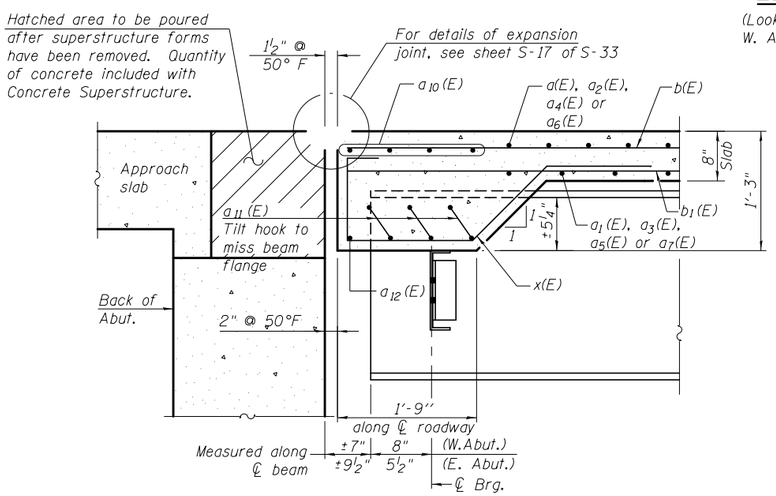

SECTION A-A

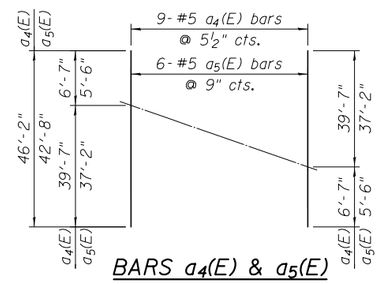

BARS a4(E) & a5(E)

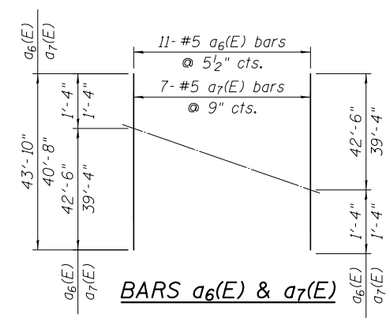

BARS a6(E) & a7(E)

*CUTTING DIAGRAMS

*Order bars full length and cut as shown above. Place as indicated on Plans.

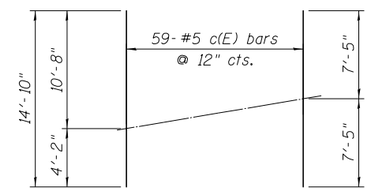

BAR c(E)

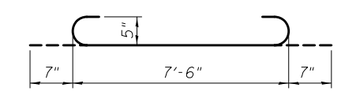

BAR a11(E)

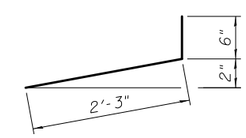

BAR d2(E)

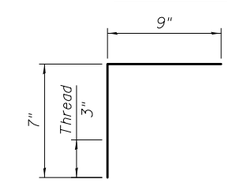

BAR c1(E)

SUPERSTRUCTURE BILL OF MATERIAL

	Bar	No.	Size	Length	Shape
	a(E)	482	#5	43'-5"	
	a1(E)	444	#5	30'-0"	
	a2(E)	18	#5	43'-5"	
	a3(E)	12	#5	43'-5"	
*	a4(E)	9	#5	46'-2"	
*	a5(E)	6	#5	42'-8"	
*	a6(E)	11	#5	43'-10"	
*	a7(E)	7	#5	40'-8"	
	a8(E)	260	#6	21'-6"	
	a9(E)	260	#6	6'-6"	
	a10(E)	16	#5	43'-8"	
	a11(E)	60	#5	8'-8"	
	a12(E)	6	#5	27'-10"	
	a13(E)	20	#5	4'-0"	
	a14(E)	8	#5	8'-0"	
	b(E)	344	#5	32'-3"	
	b1(E)	380	#5	26'-6"	
	b2(E)	38	#5	32'-6"	
*	c(E)	59	#5	14'-10"	
	c1(E)	240	#5	1'-4"	
	d(E)	262	#5	5'-7"	
	d1(E)	131	#5	7'-10"	
	d2(E)	131	#5	2'-9"	
	d3(E)	131	#5	6'-10"	
	e(E)	84	#4	19'-6"	
	e1(E)	10	#8	29'-2"	
	e2(E)	10	#4	25'-10"	
	x(E)	140	#5	6'-5"	
	Reinforcement Bars Epoxy Coated			Pound	82,670
	Bridge Deck (Shrinkage Reducing Admixture)			Cu. Yd.	265.9
	Concrete Superstructure			Cu. Yd.	62.4
	Bridge Deck Grooving			Sq. Yd.	719
	Protective Coat			Sq. Yd.	1227

Notes:

1. Bars Indicated 20 x 3-#5 etc. indicates 20 lines of bars with 3 lengths per line.
2. All edges shall have standard ¾" chamfer except as noted.
3. Bridge Deck (Shrinkage Reducing Admixture) refers to all bridge deck, fillet, and edge beam concrete. Concrete Superstructure refers to all median, parapet, and hatch block concrete.

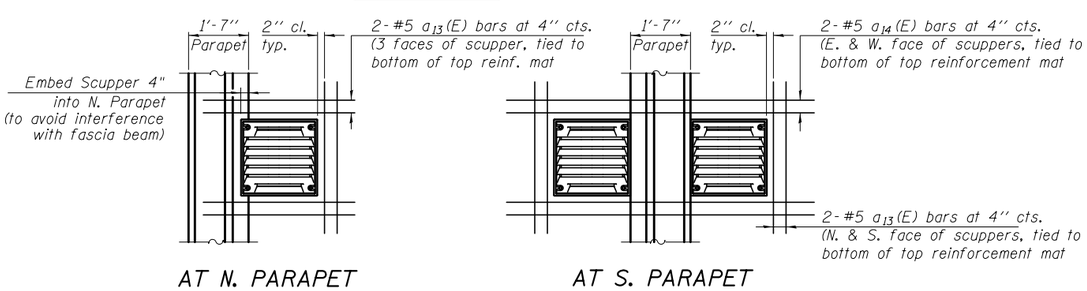

AT N. PARAPET

AT S. PARAPET

SCUPPER REINFORCEMENT DETAILS

Note:
Cut longitudinal reinforcement to clear drainage scuppers.

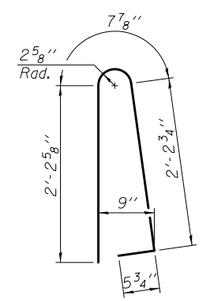

BAR d(E)

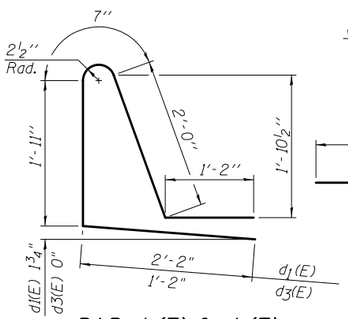

BAR d1(E) & d3(E)

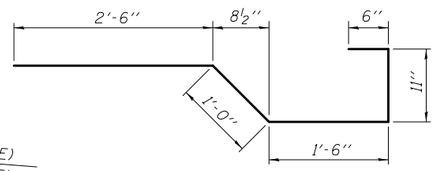

BAR x(E)

BOWMAN, BARRETT & ASSOCIATES INC.
CONSULTING ENGINEERS
Chicago, Illinois
312.228.0100
www.bbandainc.com

FILE NAME =	USER NAME =	DESIGNED - MRM	REVISED -
		CHECKED - TL	REVISED -
	PLOT SCALE = N.T.S.	DRAWN - MTR	REVISED -
	PLOT DATE = 1/27/2012	CHECKED - SF	REVISED -

STATE OF ILLINOIS
DEPARTMENT OF TRANSPORTATION

SUPERSTRUCTURE DETAILS II
STRUCTURE NO. 049-0533

SHEET NO. S-12 OF S-33 SHEETS

F.A.U. RTE.	SECTION	COUNTY	TOTAL SHEETS	SHEET NO.
1199	49-1(HB & HB-1)R	LAKE	225	126

CONTRACT NO. 60L76

ILLINOIS FED. AID PROJECT

S:\I01\05_CADD\60L76 Russell Rdwy\60L76 Sheets\0490533-60L76-013-SD2.dgn
1/27/2012 3:50:41 PM