(3) EXISTING TYPICAL CROSS SECTION

F.A.P. ROUTE 730 (U.S. 51 BUSINESS)

LOCATION #6

STATION	TO	STATION
20+12.00		22+45.00 (LAFAYETTE ST.)

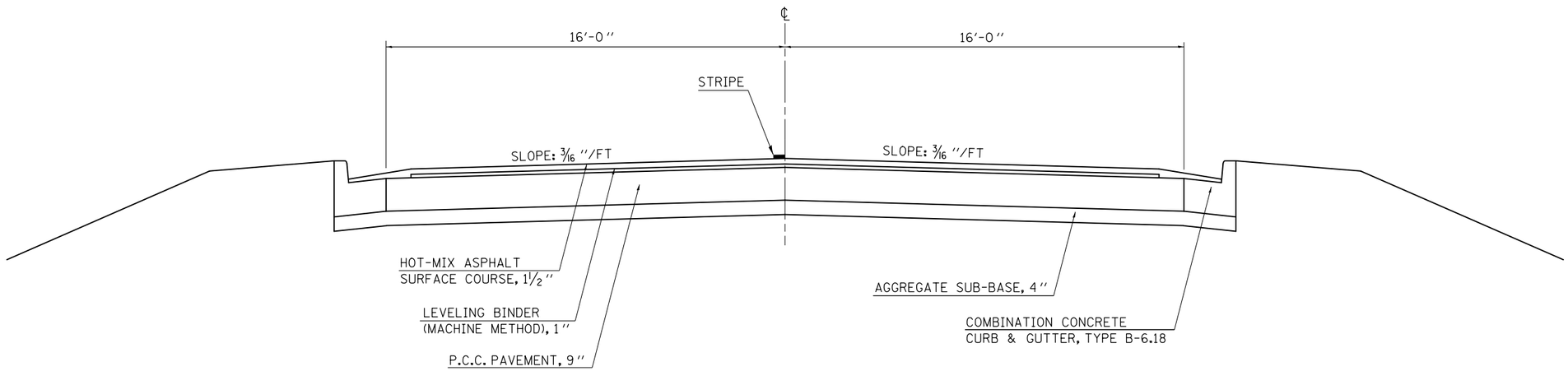

(4) EXISTING TYPICAL CROSS SECTION

F.A.P. ROUTE 730 (U.S. 51 BUSINESS)

LOCATION #6

STATION	TO	STATION
10+13.00		11+62.50 (ARMORY DR.)

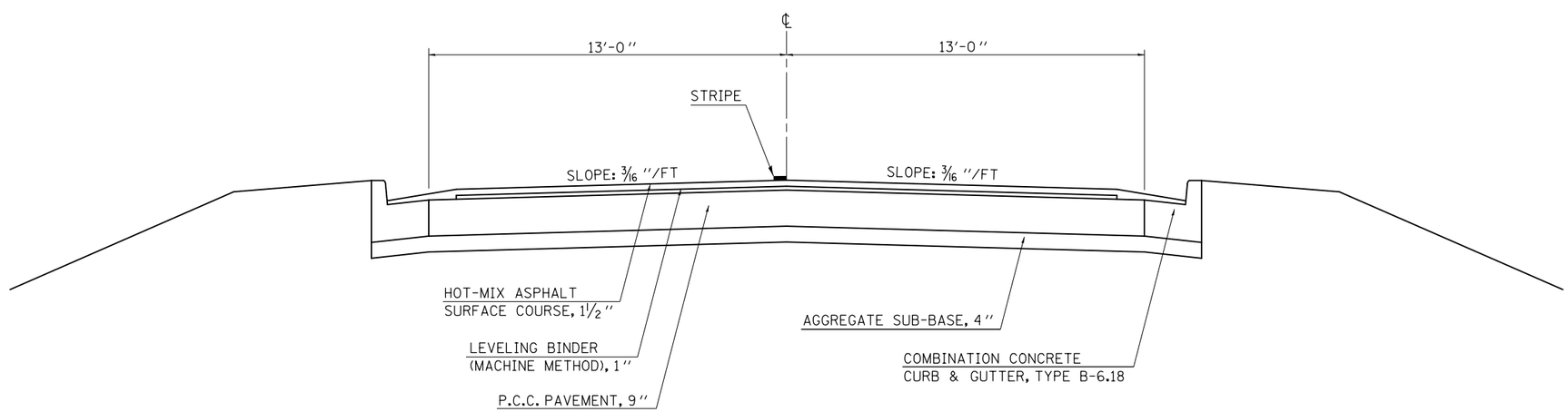

• D5 CRACK & JOINT SEAL 2012-1
•• DEWITT, MCLEAN, PIATT

FILE NAME = c:\pw_work\pwidot\piersonbr\d0287939\D570932-sht-typical.dgn	USER NAME = piersonbr	DESIGNED - GAE	REVISED -
		DRAWN - BBP	REVISED -
	PLOT SCALE = 40.0000 ' / in.	CHECKED -	REVISED -
	PLOT DATE = 1/25/2012	DATE - 12/01/11	REVISED -

STATE OF ILLINOIS
DEPARTMENT OF TRANSPORTATION

EXISTING TYPICAL CROSS SECTIONS
LOCATION #6

SCALE: NONE | SHEET 2 OF 2 SHEETS | STA. TO STA.

F.A. RTE.	SECTION	COUNTY	TOTAL SHEETS	SHEET NO.
VAR.	•	••	36	24

CONTRACT NO. 70932

ILLINOIS FED. AID PROJECT