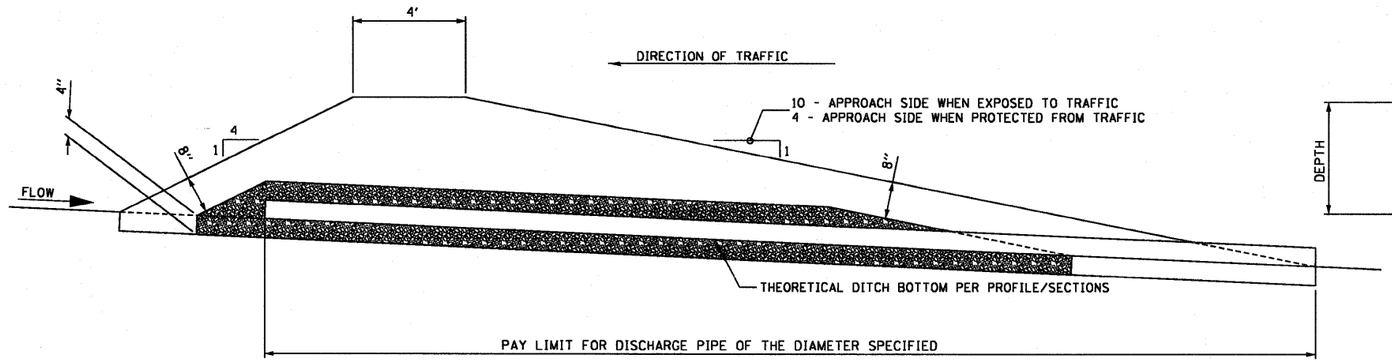

SECTION B-B

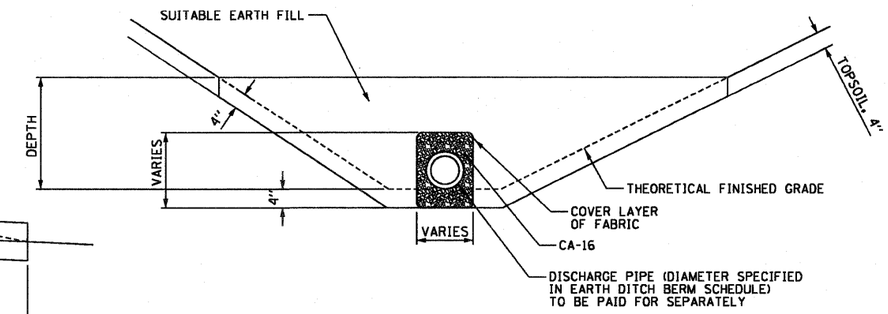

SECTION A-A

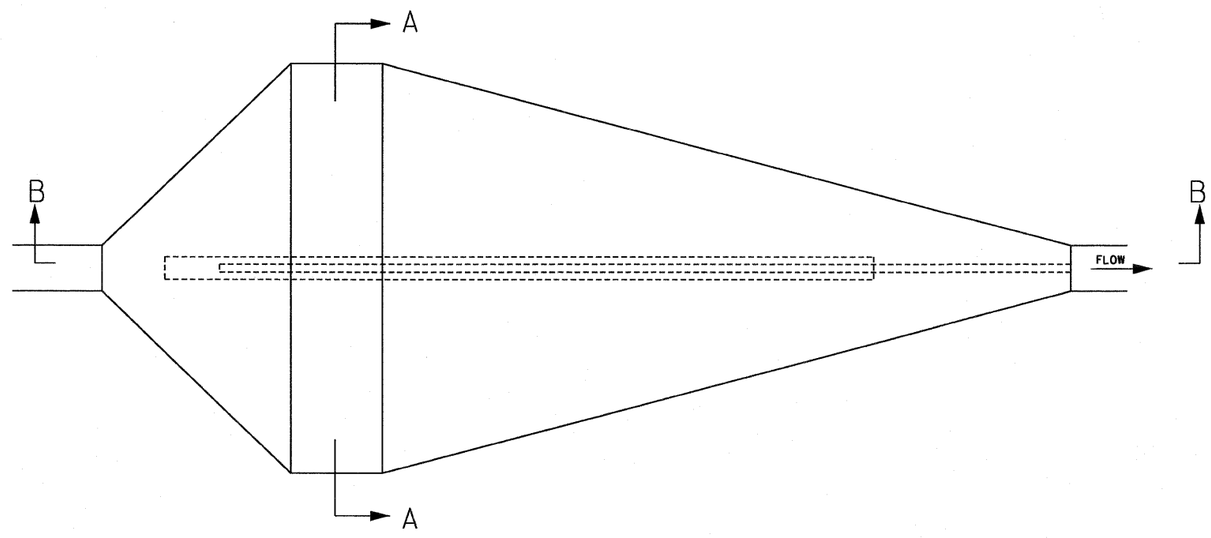

PLAN VIEW

FILE NAME = DBTRI-76C52-sht-drain-details-02-ditch-checks.dgn	USER NAME = searsb	DESIGNED KLK	REVISED -	STATE OF ILLINOIS DEPARTMENT OF TRANSPORTATION	DRAINAGE DETAILS – EARTH DITCH BERM	F.A.I RTE.	SECTION	COUNTY	TOTAL SHEETS	SHEET NO.
		DRAWN KLK	REVISED -			•	82-1-R(A), 82-1-R(B)	ST. CLAIR	629	525
	PLOT SCALE = 100.0000 '/ in.	CHECKED EEY	REVISED -			• 64/998/70		CONTRACT NO. 76C52		
	PLOT DATE = 1/25/2012	DATE 1-20-12	REVISED -		SCALE: NONE / SHEET NO. 2 OF 4 SHEETS / STA. NONE TO STA. NONE	FED. ROAD DIST. NO.	ILLINOIS	FED. AID PROJECT		