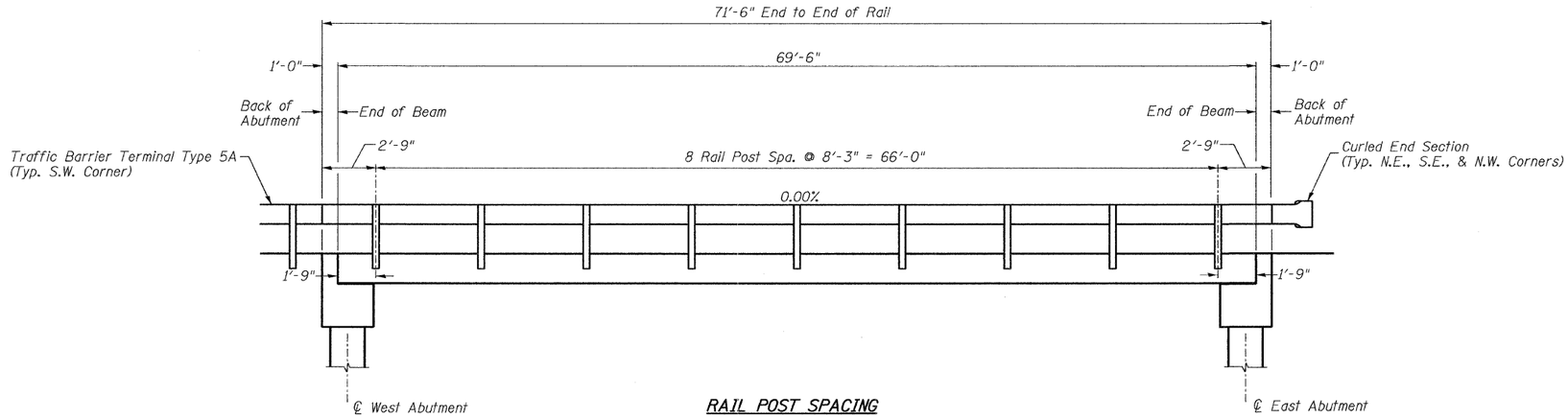

RAIL POST SPACING

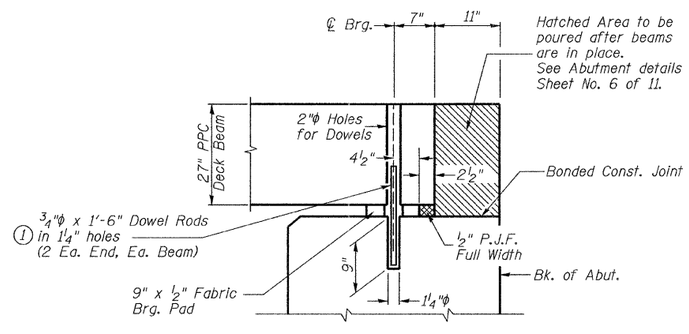

SECTION THRU ABUTMENTS
(At Right Angles)

(1) Dowel Rods to be grouted after beams are in place and allowed to cure (Min. 24 hr.) prior to grouting the shear keys.

RAIL POST SPACING AND
SUPERSTRUCTURE DETAILS
BUREAU COUNTY
SECTION 11-07119-00-BR
T.R. 55 OVER UNION DITCH

SHEET NO. 5	ROUTE NO.	SECTION	COUNTY	TOTAL SHEETS	SHEET NO.
	TR 55	11-07119-00-BR	BUREAU	21	11
11 SHEETS	S.N. 006-4096		CONTRACT NO. 87499		
	FED. ROAD DIST. NO. 7	ILLINOIS	FED. AID PROJECT BRS-0011(083)		

3067b005