STATE OF ILLINOIS
DEPARTMENT OF TRANSPORTATION

STATE OF ILLINOIS
DEPARTMENT OF TRANSPORTATION

* Verify before drilling holes in mounting tube and cross tubes.

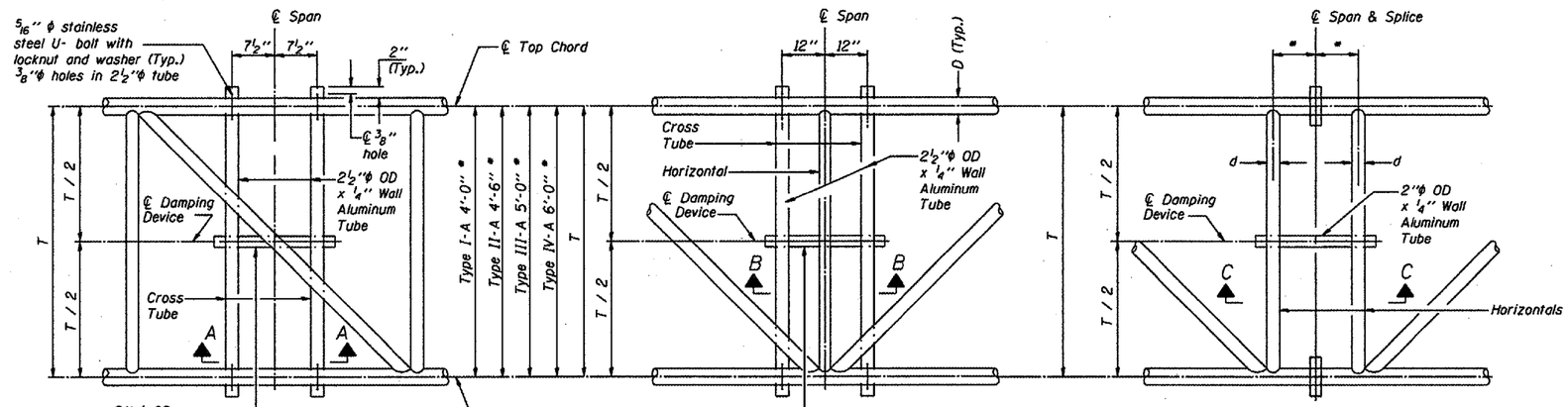

PLAN DETAIL "A"
℄ SPAN BETWEEN PANEL POINTS

PLAN DETAIL "B"
℄ SPAN AT PANEL POINT

PLAN DETAIL "C"
℄ SPAN AT ℄ CHORD SPLICE

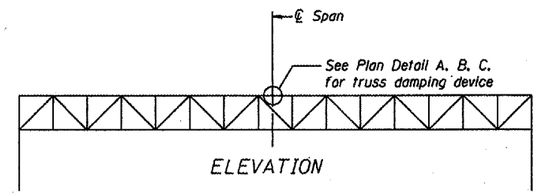

ELEVATION

Aluminum Overhead Sign Truss

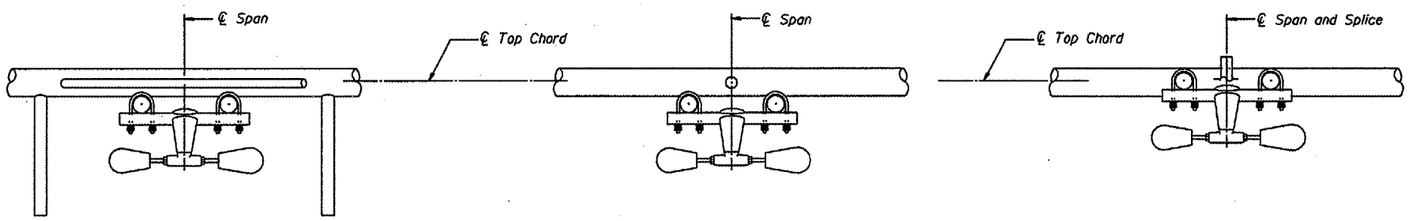

SECTION A-A

SECTION B-B

SECTION C-C

This detail applies to the following overhead sign structures:
1. 2S101U020R009.5
2. 2S006I080R059.9
3. 2S037I080L010.2

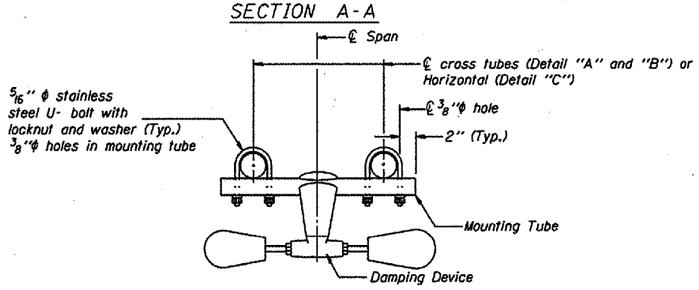

TRUSS DAMPING

(Typical)

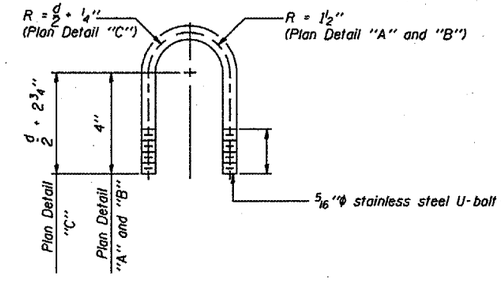

DAMPING DEVICE MOUNTING TUBE U-BOLT DETAIL

(Typical)

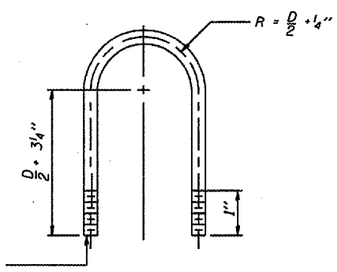

TOP CHORD TO CROSS TUBE U-BOLT DETAIL

(Typical - Detail "A" and "B")

GENERAL NOTES

Damper: One damper per truss. (31 lbs. Stockbridge-Type Aluminum)

Materials: Aluminum tubes shall be ASTM B221 alloy 6061 temper T6

Fasteners: U-bolts shall be produced from ASTM A276 Type 304, 304L, 316 or 316L, Condition A, cold finish, or an equivalent material acceptable to the Engineer. All nuts shall be stainless steel conforming to ASTM A194, Grade 8 (AISI Type 304) or Grade 8F (AISI Type 303). The nuts shall be "locknuts" with nylon or steel inserts and semifinished hexagonal heads equivalent to the finished hex series of the American National Standards. All washers shall be stainless steel conforming to ASTM A240, Type 302 or 304.

DESIGNED -	
CHECKED -	
DRAWN -	
CHECKED -	

\- 20

EXAMINED
ENGINEER OF BRIDGE DESIGN

PASSED
ENGINEER OF BRIDGES AND STRUCTURES

TRUSS DAMPER RETROFIT 07-01-2001

OVERHEAD SIGN STRUCTURE
DAMPING DEVICE

District 2
Overhead Sign
Structure Replacement