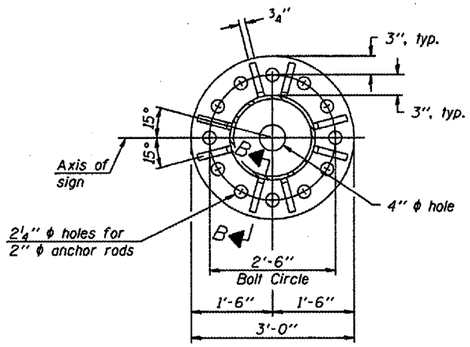

SECTION A-A

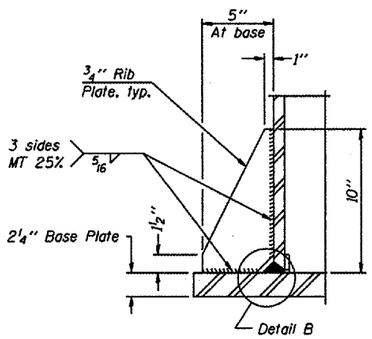

SECTION B-B

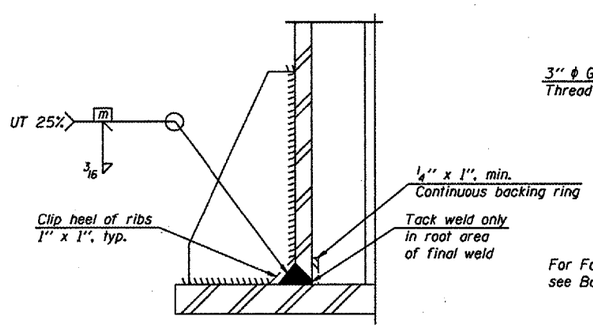

DETAIL B
(Typical rib)

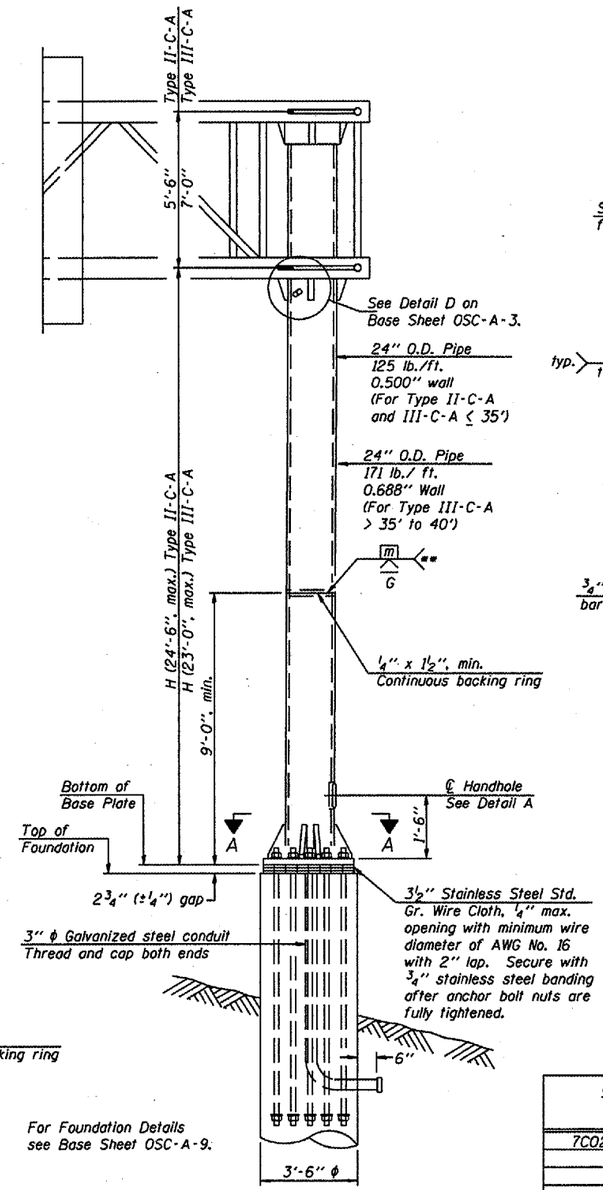

For Foundation Details see Base Sheet OSC-A-9.

FRONT ELEVATION

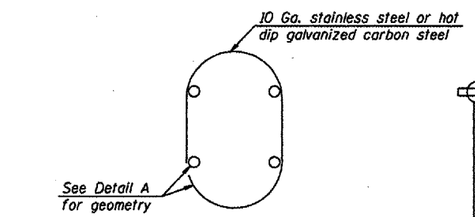

HANDHOLE COVER

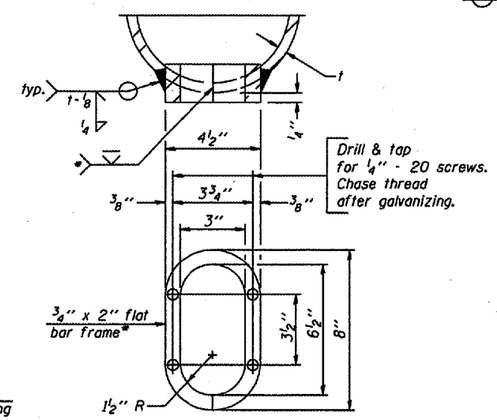

Provide 8" x 4 1/2" cover. Outside corners = 2 1/4" radius. Provide 4-5/16" ϕ holes in cover for 1/4" - 20 round head hot dip galvanized or stainless steel machine screws. (See cover details.)

DETAIL A

* Bent bars may be butt welded top and bottom or bottom only. In lieu of fabricated handhole frame as shown, may cut from 2" plate (rolling direction vertical). All cut faces to be ground to ANSI Roughness of 500 μin or less.

** Butt welded joint in post is only allowed for post heights (H) over 20 ft. in length. If used, weld procedure must be preapproved by Engineer and joint shall receive 100% RT or UT (tension criteria) at Contractor's expense.

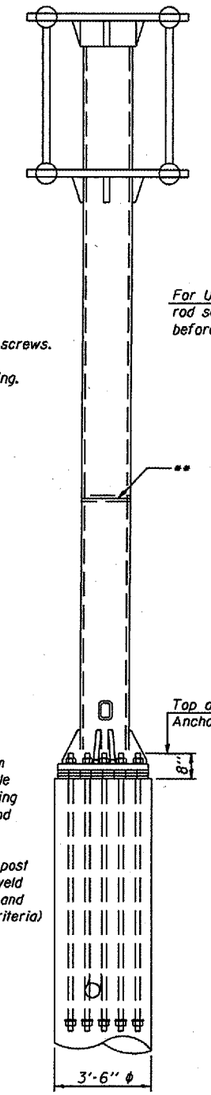

SIDE ELEVATION

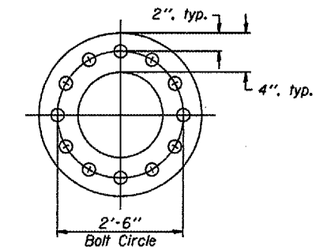

SUGGESTED POSITIONING PLATE

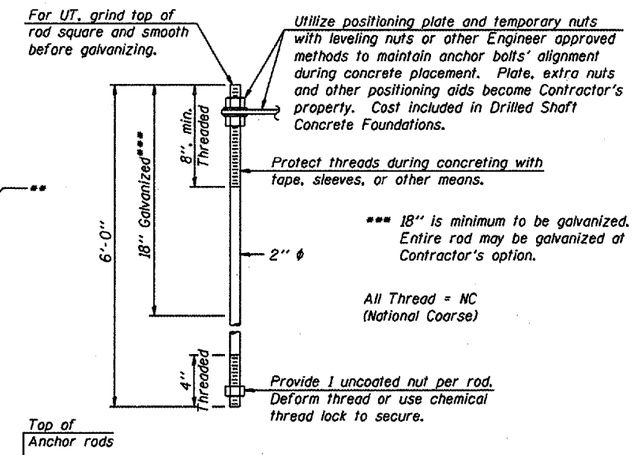

ANCHOR ROD DETAIL

Anchor rods shall conform to AASHTO M314 Grade 55 and meet Charpy V-Notch (CVN) energy of 15 lb.-ft. at 10° F. before galvanizing. Galvanize the upper 18" (minimum***) and associated M291, Grade A. C or DH heavy hex nuts and hardened washers per AASHTO M232. No welding shall be permitted on rods. Provide an unfinished nut at bottom, a hexagon locknut and washer above base plate and a leveling nut and washer below base plate. Nuts shall each be tightened with 200 lb.-ft. minimum torque against base plate. Before or after threading, but before galvanizing, each anchor rod shall be ultrasonically tested (UT) by a Level II or III inspector, qualified in accord with ANSI guidelines, using a straight beam, 1/2" ϕ 3.5 mhz. transducer, to insure no rejectable flaws exist in the upper 18" (tension criteria). Cost of testing included in Drilled Shaft Concrete Foundations.

Structure Number	Station	H
7C0251057R166.1	5502 + 38	24' - 4"

The Contractor shall field verify the height of the support.

DESIGNED -	
CHECKED -	
DRAWN -	
CHECKED -	

\- 20
EXAMINED
ENGINEER OF BRIDGE DESIGN
PASSED
ENGINEER OF BRIDGES AND STRUCTURES

NUMBER	REVISION	DATE

CANTILEVER SIGN STRUCTURES
TYPE II-C-A & III-C-A TRUSS SUPPORT POST
ALUMINUM TRUSS & STEEL POST

District 7
Overhead Sign Structure
Repair and Replacement

OSC-A-5 1-7-05