STATE OF ILLINOIS
DEPARTMENT OF TRANSPORTATION

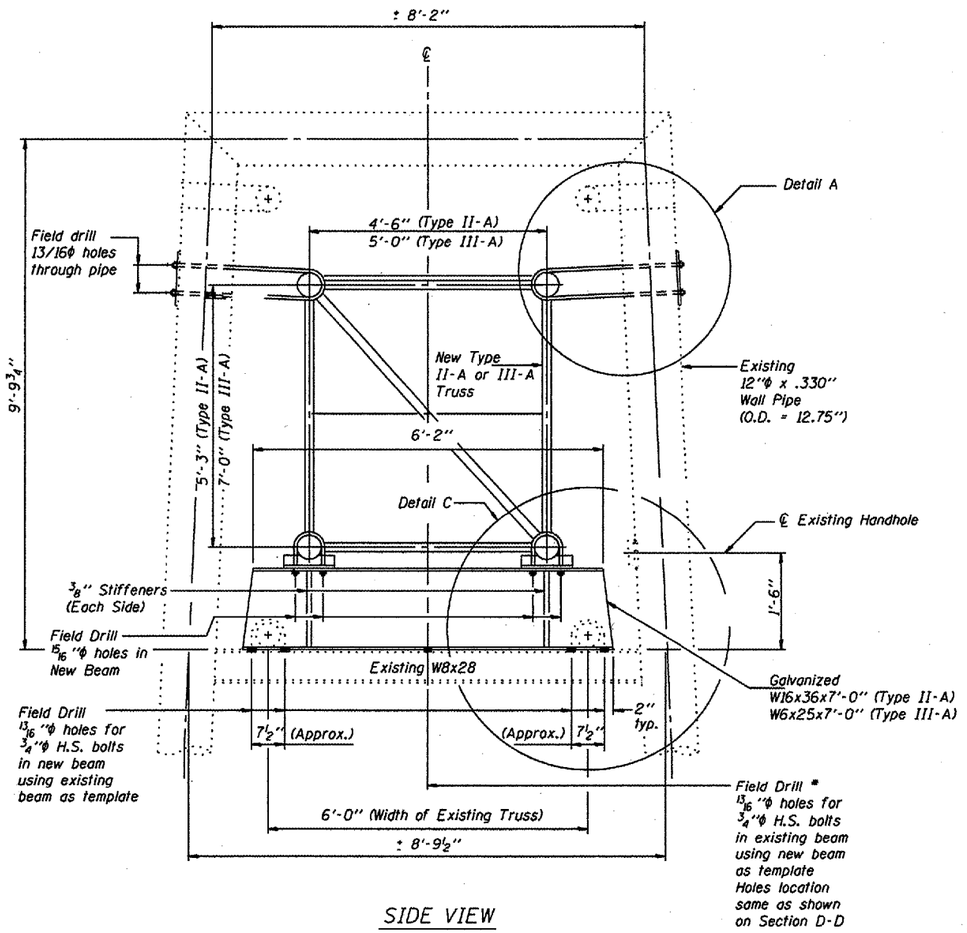

SIDE VIEW

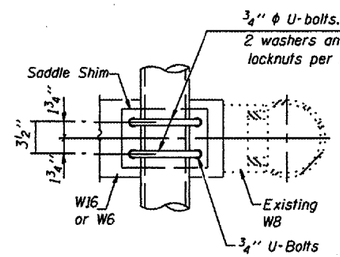

SECTION C-C

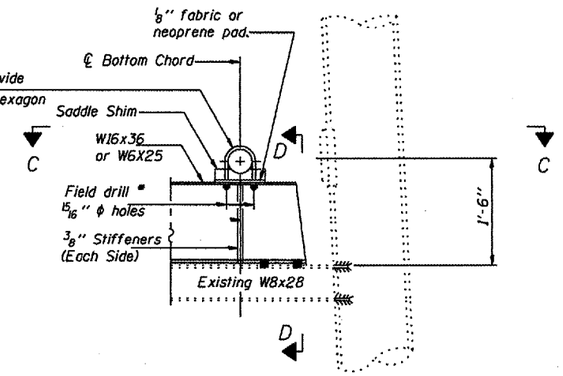

DETAIL C

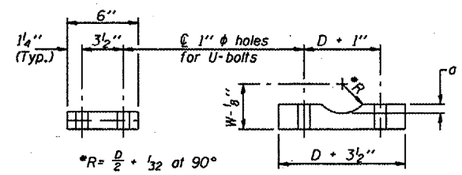

*R = $\frac{D}{2}$ + $\frac{1}{32}$ at 90°

D = Outside Diameter of Chord.

SADDLE SHIM DETAIL

ASTM B26 Alloy 356-F
or
ASTM B209 Alloy 6061-T651
(4 required per sign truss)

Truss Chord Nominal Dia.	a	W
5½"	13/16"	4¾"
6"	⅞"	4¾"
6½"	15/16"	4¾"
7"	1"	4¾"
8½"	1¼"	5½"
9"	1⅜"	5¾"

¾" ϕ stainless steel U-bolt.
Provide two washers and two
hexagon locknuts. Field drill
13/16" ϕ holes through pipe.
(4 holes required per pipe)

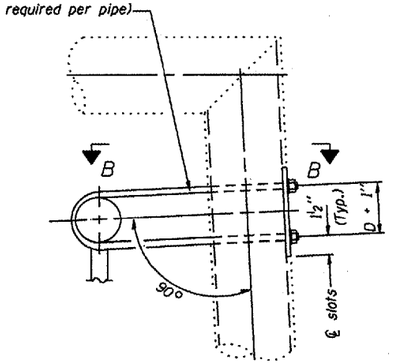

DETAIL A

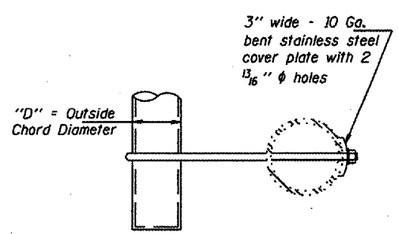

SECTION B-B

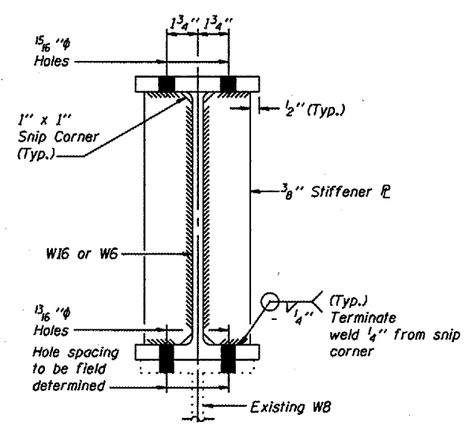

SECTION D- D

OVERHEAD SIGN STRUCTURES
EXISTING SUPPORT FRAME
RETROFIT for ALUMINUM TRUSS

District 8
Overhead Sign
Structure Repair
and Replacement

DESIGNED	
CHECKED	
DRAWN	
CHECKED	

20
EXAMINED
ENGINEER OF STRUCTURAL SERVICES
PASSED
ENGINEER OF BRIDGES AND STRUCTURES

OS-A-12-RETROFIT 12-06-04