STATE OF ILLINOIS
DEPARTMENT OF TRANSPORTATION

ROUTE NO.	SECTION	COUNTY	TOTAL SHEETS	SHEET NO.
F.A.U. 9251	28-3 BR-I	ST. CLAIR	101	30
FED. ROAD DIST. NO. 7	ILLINOIS	FED. AID PROJECT-		

SHEET NO. 7
18 SHEETS

Contract #76394

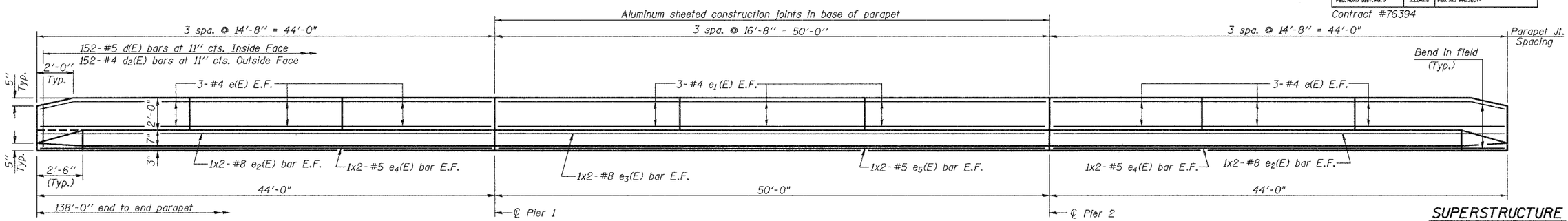

INSIDE ELEVATION OF PARAPET

MIN. BAR LAPS

#5 bar = 1'-8"
#8 bar = 3'-5"

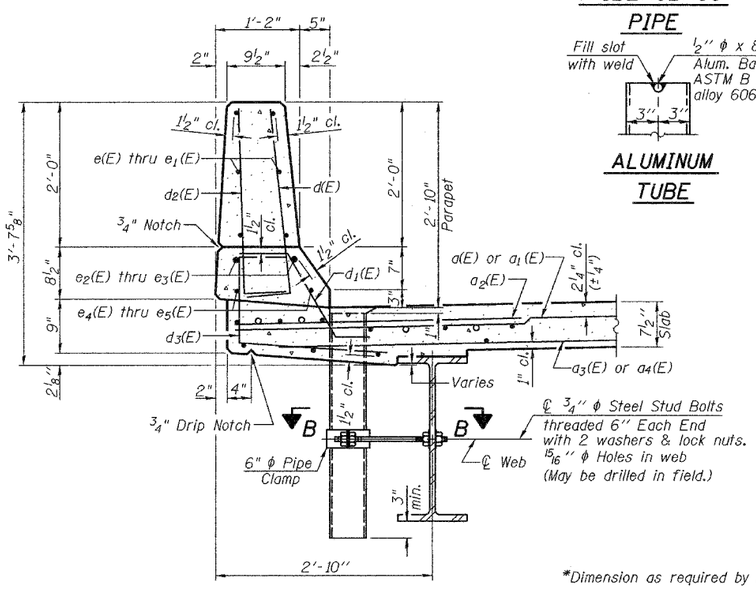

SECTION THRU PARAPET

½" φ x 8" Fiberglass Reinf. Plastic Rebar

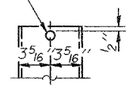

FIBERGLASS PIPE

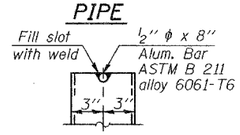

ALUMINUM TUBE

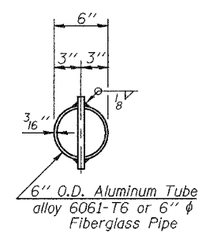

TOP PLAN
(Showing Aluminum Tube)

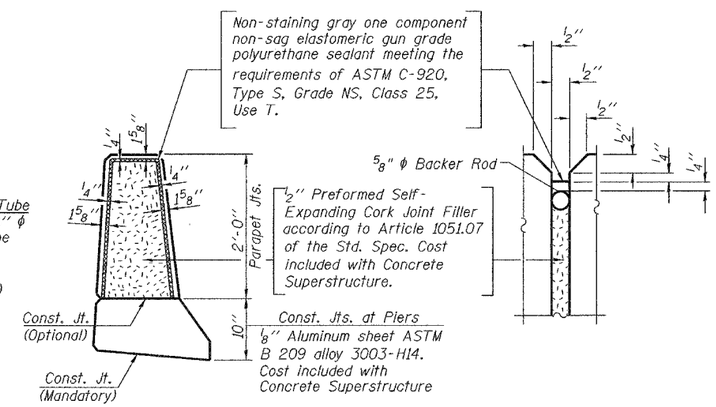

PARAPET JOINT DETAILS

Notes: The exterior surfaces of the floor drains shall be painted with the finish coat as specified in the special provisions for Cleaning and Painting New Metal Structures. The exterior surfaces of the drains shall be cleaned according to Steel Structures Painting Council's Spec. SSPC-SP1 prior to painting.

Fiberglass pipe shall conform to ASTM D 2996, with short-time rupture strength hoop tensile stress of 30,000 p.s.i. minimum.

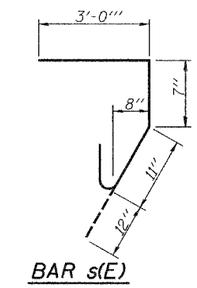

BAR s(E)

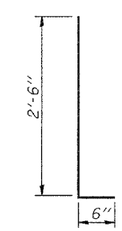

BARS d(E) & d2(E)

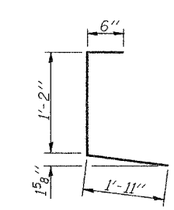

BAR d3(E)

SUPERSTRUCTURE BILL OF MATERIAL

Bar	No.	Size	Length	Shape
a(E)	237	#5	31'-1"	
a1(E)	237	#5	19'-1"	
a2(E)	474	#6	6'-0"	
a3(E)	166	#5	18'-3"	
a4(E)	166	#5	30'-3"	
a5(E)	2	#5	20'-11"	
a6(E)	2	#5	20'-1"	
a7(E)	2	#5	34'-0"	
a8(E)	2	#5	33'-2"	
b(E)	324	#5	24'-9"	
b1(E)	104	#6	28'-11"	
b2(E)	245	#5	29'-4"	
d(E)	304	#5	3'-0"	
d1(E)	292	#5	2'-5"	
d2(E)	304	#4	3'-0"	
d3(E)	304	#4	3'-7"	
d4(E)	12	#5	2'-2"	
e(E)	72	#4	14'-4"	
e1(E)	36	#4	16'-4"	
e2(E)	16	#8	23'-7"	
e3(E)	8	#8	26'-7"	
e4(E)	16	#5	22'-8"	
e5(E)	8	#5	25'-8"	
m(E)	4	#6	20'-1"	
m1(E)	4	#6	33'-3"	
m2(E)	6	#6	21'-1"	
m3(E)	6	#6	34'-2"	
m4(E)	20	#6	9'-11"	
m5(E)	12	#6	7'-11"	
m6(E)	12	#6	6'-9"	
m7(E)	6	#6	2'-9"	
m8(E)	2	#6	3'-9"	
s(E)	114	#5	5'-6"	
s1(E)	98	#4	8'-0"	
v(E)	104	#5	3'-10"	
Reinforcement Bars, Epoxy Coated			Pound	54980
Concrete Superstructure			Cu. Yds.	227.8

Reinforcement bars designated (E) shall be epoxy coated.
Bars indicated thus 1 x 2-#5 etc. indicates 1 line of bars with 2 lengths per line.

*Dimension as required by Pipe Clamp

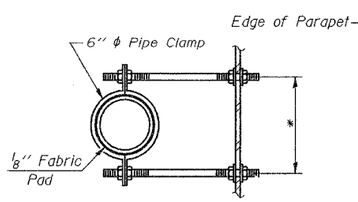

SECTION B-B

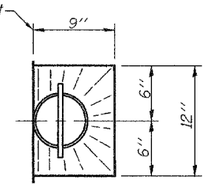

TOP PLAN

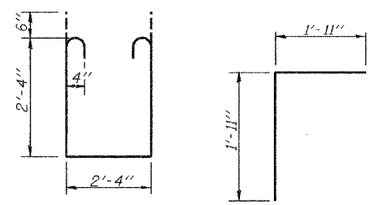

BAR s1(E)

BAR v(E)

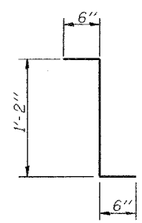

BAR d4(E)

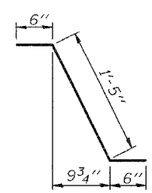

BAR d1(E)

DESIGNED	Rebecca Tharp
CHECKED	Curt Evoy
DRAWN	R. Sommer
CHECKED	RLT/CME

March 16 2006
EXAMINED Thomas J. Domagalski
ENGINEER OF BRIDGE DESIGN
PASSED Ralph E. Anderson
ENGINEER OF BRIDGES AND STRUCTURES

SUPERSTRUCTURE DETAILS
F.A.U. ROUTE 9251 - SECTION 28-3BR-I
ST. CLAIR COUNTY
STATION 246+33.80
STRUCTURE NO. 082-0398

\projects\rpsd0505\0820398.dgn 3/16/2006 9:04:32 AM