RISER FOR MEDIAN INLET

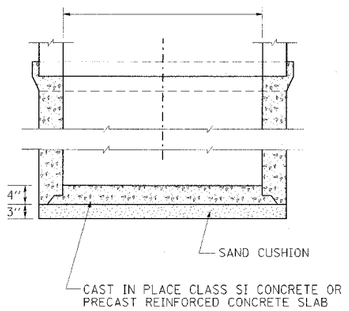

GENERAL NOTES

THE CONTRACT UNIT PRICE PER FOOT FOR PIPE CULVERT CLASS A, OF THE TYPE AND SIZE SPECIFIED SHALL INCLUDE THE SAND CUSHION AND CAST-IN-PLACE OR PRECAST REINFORCED CONCRETE SLAB.

RISER FOR MEDIAN INLET 26.4

REVISED 9-19-05

SIDEWALK AND DRIVEWAY PAVEMENT PAY AREAS

F.A. RTE.	SECTION	COUNTY	TOTAL SHEETS	SHEET NO.
595	1 - 1	ROCK ISLAND	239	174
STA		TO STA		
FED. RD DIST. NO.	ILLINOIS	FED. AID PROJECT		
				CONTRACT # 84986

PAY FOR AS

- SIDEWALK REMOVAL
- DRIVEWAY PAVEMENT REMOVAL
- PCC SIDEWALK 127 (5)
- PCC DRIVEWAY PAVEMENT 178 (7)

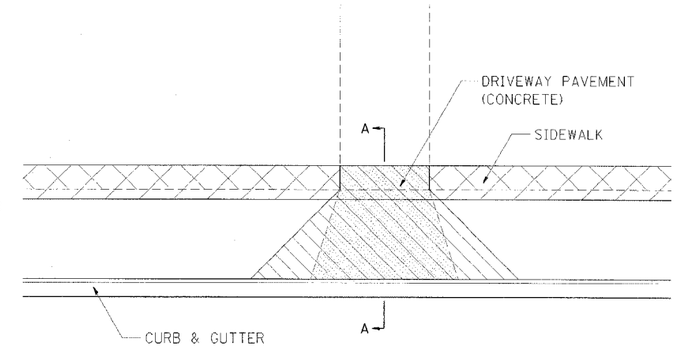

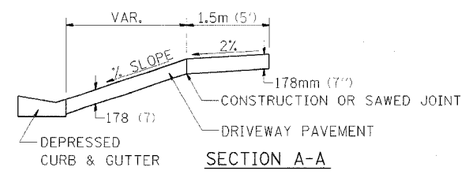

SECTION A-A

FOR DETAILS ON DIMENSIONS AND GRADES, SEE DISTRICT STANDARD 25.1 OR PLANS.

ALL DIMENSIONS ARE IN MILLIMETERS (INCHES) UNLESS OTHERWISE NOTED.

SIDEWALK AND DRIVEWAY PAVEMENT PAY AREAS 35.4

REVISED 10-15-04

DELINEATOR AND POST ORIENTATION

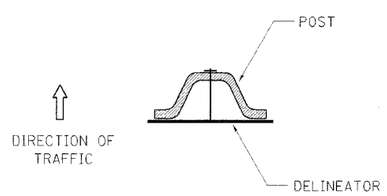

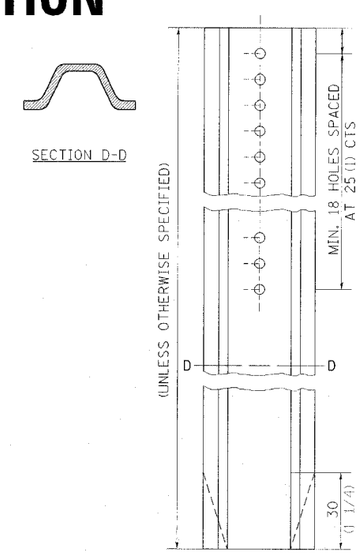

DELINEATORS SHALL BE INSTALLED ACCORDING TO STANDARD 635001 EXCEPT THAT THE POST SHALL BE ROTATED 180°. THE POST WILL HAVE THE WIDE SIDE FACING TRAFFIC AND THE DELINEATOR ATTACHECD AS SHOWN ABOVE.

ALL DIMENSIONS ARE IN MILLIMETERS (INCHES) UNLESS OTHERWISE NOTED.

DELINEATOR AND POST ORIENTATION 37.4

REVISED 1-31-00

WITNESS MARKER FOR PERMANENT SURVEY MARKERS TYPE II

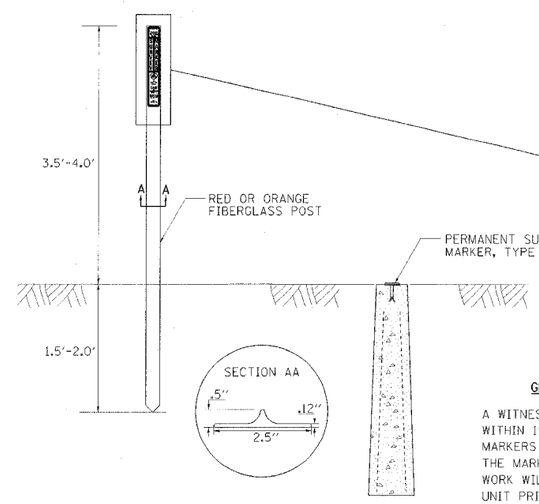

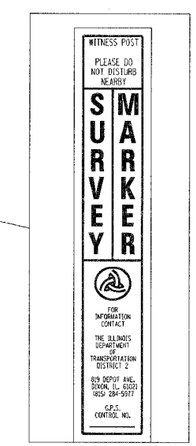

GENERAL NOTES

A WITNESS MARKER SHALL BE INSTALLED WITHIN 1' OF ALL PERMANENT SURVEY MARKERS TYPE II EXCEPT IN AREAS WHERE THE MARKER IS IN THE SIDEWALK. THIS WORK WILL BE INCLUDED TO THE CONTRACT UNIT PRICE PER EACH FOR PERMANENT SURVEY MARKERS, TYPE II.

WITNESS MARKER FOR PERMANENT SURVEY MARKERS TYPE II 38.4

REVISED 1-31-00