F.A.U. RTE.	SECTION	COUNTY	TOTAL SHEETS	SHEET NO.
8873	00-00012-00-PK	MADISON	18	12
FED. ROAD DIST. NO.	ILLINOIS	FED. AID PROJECT		

CONTRACT NO. 97270

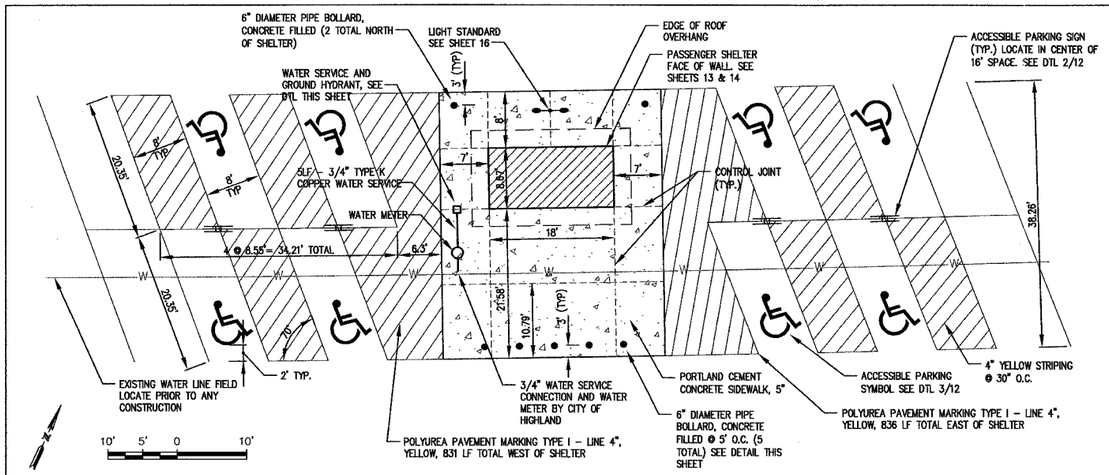

PASSANGER SHELTER PARKING LAYOUT | 1
1" = 10' | 12

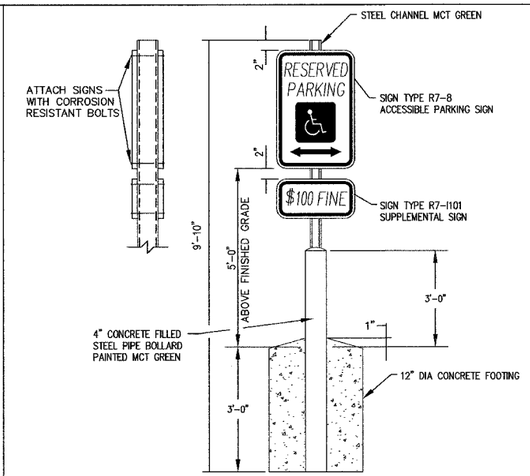

ACCESSIBLE PARKING SIGN | 2
N.T.S | 12

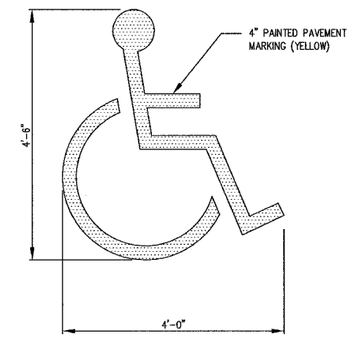

ACCESSIBLE PARKING SYMBOL | 3
N.T.S | 12

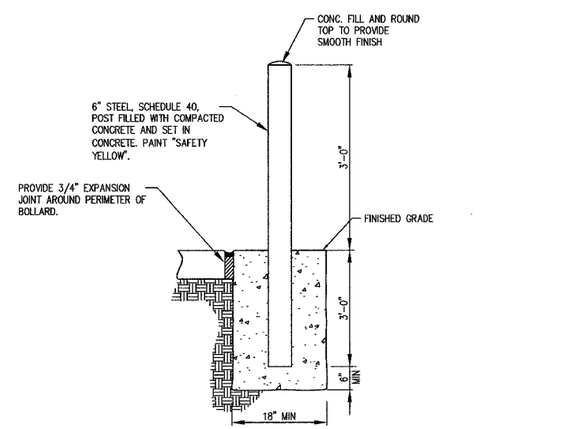

6" DIAMETER PIPE BOLLARD, CONCRETE FILLED | 4
N.T.S | 12

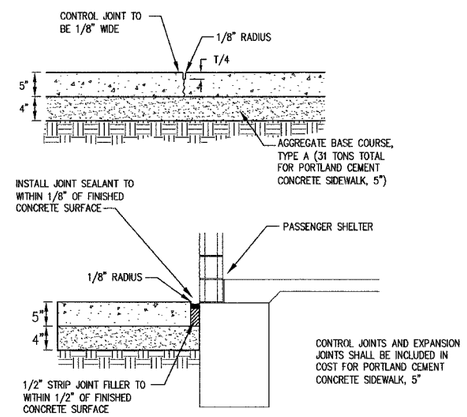

EXPANSION AND CONTROL JOINTS | 5
N.T.S | 12

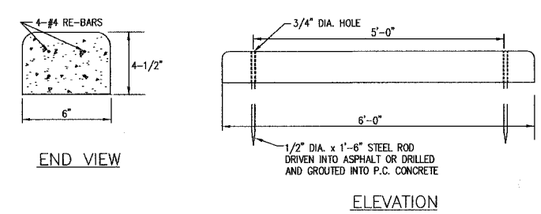

NOTE: WHEEL STOPS TO BE LOCATED 2.5' FROM CENTER OF WHEELSTOP TO EDGE OF PAVEMENT AT NEAREST LOCATION

WHEEL STOP | 6
N.T.S | 12

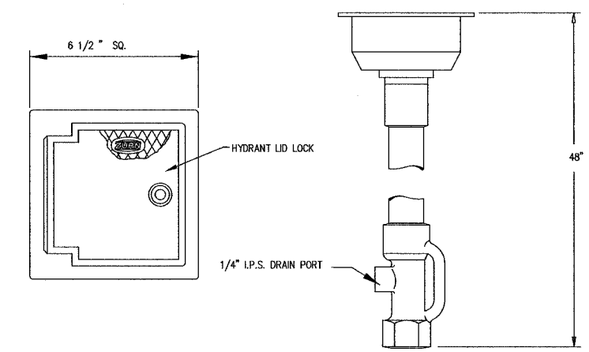

GROUND HYDRANT - ZURN MODEL Z1361-CL-VB WITH CYLINDER LOCK AND VACUUM BREAKER OR APPROVED EQUAL

GROUND HYDRANT | 7
N.T.S | 12

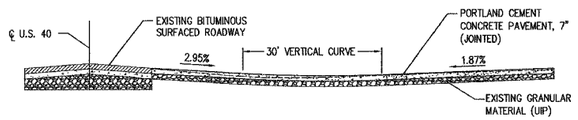

SECTION A-A

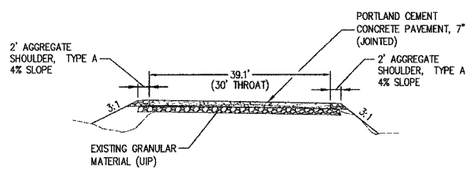

SECTION C-C

WEST ENTRANCE PROFILE AND SECTION | 8
H=1":15' V=1":7.5' | 12

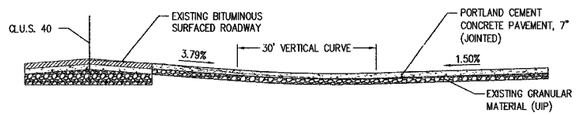

SECTION B-B

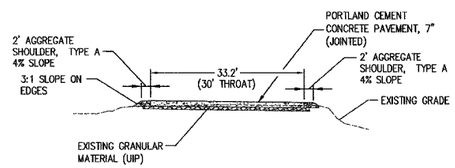

SECTION D-D

EAST ENTRANCE PROFILE AND SECTION | 9
H=1":15' V=1":7.5' | 12

NOT IN USE | 10
N.T.S | 12

FINAL	BY	DATE
SURVEY		
SURVEYED		
PLOTTED		
NOTE BOOK		
TEMPLATE		
AREAS		
AREAS CHECKED		
NO.		

ORIGINAL	BY	DATE
SURVEY		
SURVEYED		
PLOTTED		
NOTE BOOK		
TEMPLATE		
AREAS		
AREAS CHECKED		
NO.		

Juneau Associates, Inc. P.C.
CONSULTING ENGINEERS AND LAND SURVEYORS
2106 State Street, P.O. Box 1325
Granite City, Illinois 62040-1725
Phone: (618)877-1400/(618)452-5535
Fax: (618)452-5541
100 North Research Drive
Edwardsville, Illinois 62025-3648
Phone: (618)659-0900/(618)659-0800
Fax: (618)659-0041

MISC. CONSTRUCTION DETAILS
HIGHLAND PARK-RIDE IMPROVEMENTS
MADISON COUNTY TRANSIT
HIGHLAND, ILLINOIS
SECTION No. 00-00012-00-PK

REVISIONS			
NO.	DATE	BY	REMARKS

SCALE:

DSN. BY:	RGL/AJW	DATE:	12/20/05	SHEET 12
DWN. BY:	RGL/AJW	DATE:	12/20/05	
CHK'D:	RAK	DATE:	12/20/05	
DWG. NO.	JOB NO. E054401	DWG NAME:		OF 18 SHTS