SYMBOL	DESCRIPTION
	LIGHT BAR, 5 EACH, PAR 38, 120 V 120W MISER
	SEQUENCED FLASHERS
	GROUND ROD

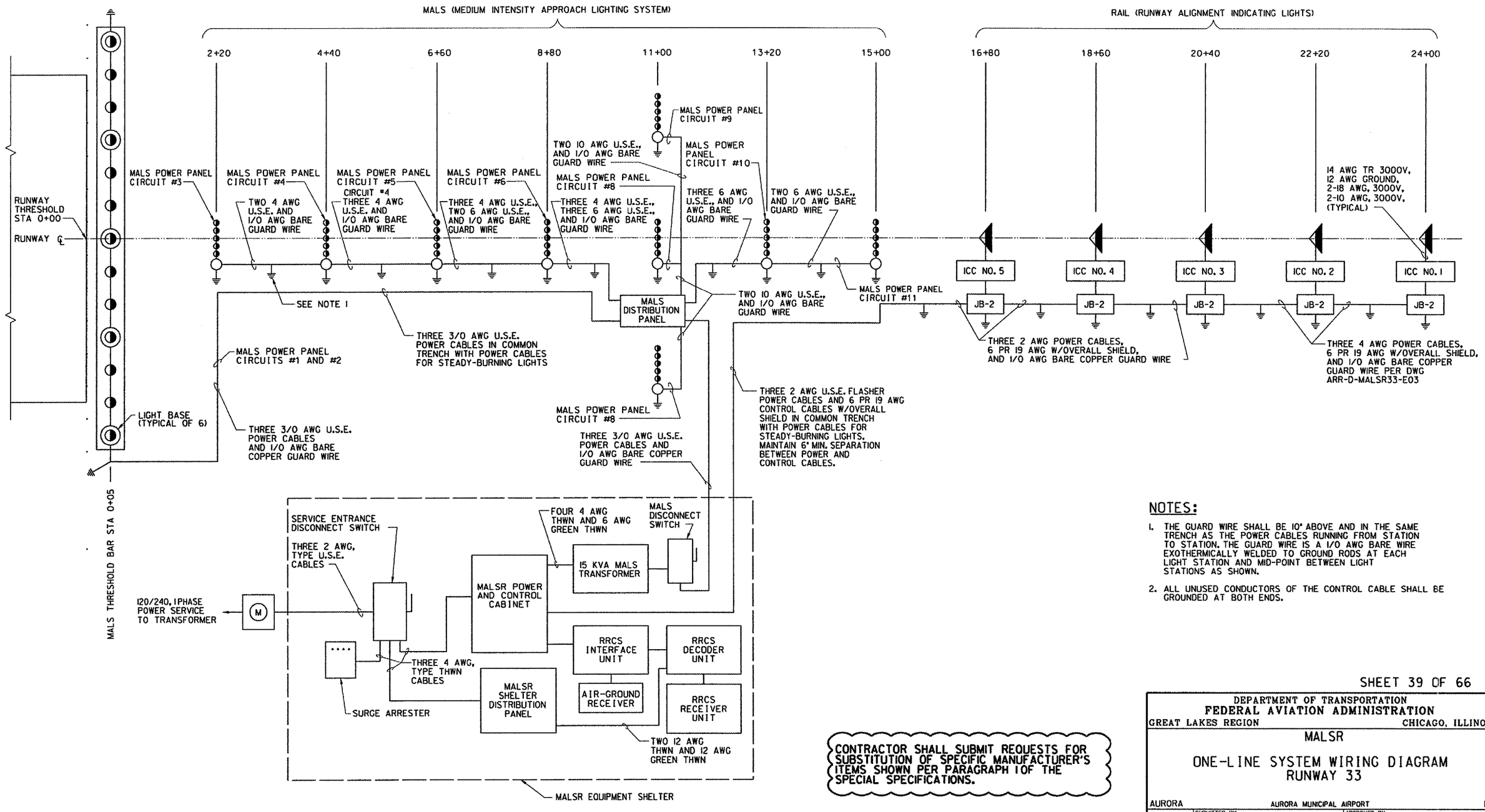

NOTES:

1. THE GUARD WIRE SHALL BE 10" ABOVE AND IN THE SAME TRENCH AS THE POWER CABLES RUNNING FROM STATION TO STATION. THE GUARD WIRE IS A I/O AWG BARE WIRE EXOTHERMICALLY WELDED TO GROUND RODS AT EACH LIGHT STATION AND MID-POINT BETWEEN LIGHT STATIONS AS SHOWN.
2. ALL UNUSED CONDUCTORS OF THE CONTROL CABLE SHALL BE GROUNDED AT BOTH ENDS.

CONTRACTOR SHALL SUBMIT REQUESTS FOR SUBSTITUTION OF SPECIFIC MANUFACTURER'S ITEMS SHOWN PER PARAGRAPH 1 OF THE SPECIAL SPECIFICATIONS.

SHEET 39 OF 66

DEPARTMENT OF TRANSPORTATION
FEDERAL AVIATION ADMINISTRATION
GREAT LAKES REGION — CHICAGO, ILLINOIS

MALSR

ONE-LINE SYSTEM WIRING DIAGRAM
RUNWAY 33

AURORA — AURORA MUNICIPAL AIRPORT — IL

REVIEWED BY	SUBMITTED BY	APPROVED BY
	PROJ ENGR. TIMOTHY DYER	PLATFORM MGR. CLELAND MICHEEL
DESIGNED TAD	ISSUED BY CHICAGO NAS IMPLEMENTATION CENTER	DATE 02/27/2006 JCN
DRAWN TAD		DRAWING NO ARR-D-MALSR33-E02 REV
CHECKED EGS		

REV	DATE	DESCRIPTION	JCN	REDLINE DATE	APVD

\\aurorapp\042850A\dgns\sheets\loo 1a drawings 3-6-06\ARR-D-MALSR33-E02.dgn 3/16/2006 3:49:20 PM $NAME$ ARRCSP