68201

F.A.I. RTE.	SECTION	COUNTY	TOTAL SHEETS	SHEET NO.
74	*	TAZEWELL	1366	50
STA.		TO STA.		
FED. ROAD DIST. NO.		ILLINOIS	FED. AID PROJECT	

*(90-11)R-2;90(13,14,14-1)R-1

INDICATES ITEMS TO BE REMOVED

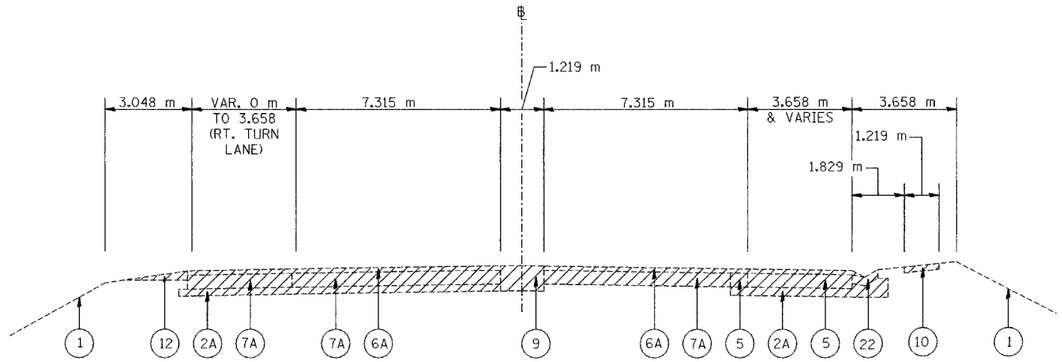

TYPICAL SECTION C1

STA. 2+412.933 TO STA. 2+533.000

C1

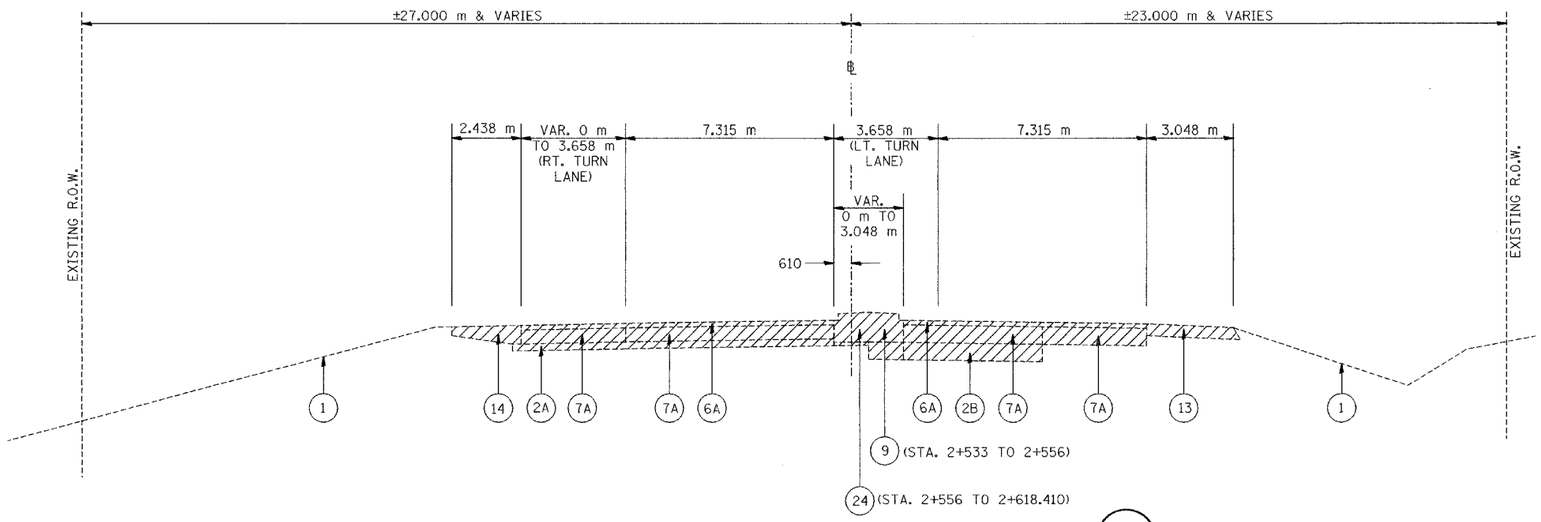

TYPICAL SECTION D1

STA. 2+533.000 TO STA. 2+618.410

D1

LEGEND

1	EXISTING GROUND LINE	10	EX PCC SIDEWALK
2A	EX SUB-BASE GRANULAR MATERIAL 150 mm	12	EX AGGREGATE SHOULDERS
2B	EX SUB-BASE GRANULAR MATERIAL 300 mm	13	EX BITUMINOUS SHOULDERS
4	EX PCC BASE COURSE 230 mm	14	EX PCC SHOULDERS
5	EX BITUMINOUS BASE COURSE	22	EX CONCRETE GUTTER
6A	EX BITUMINOUS RESURFACING 75 mm	23	EX COMBINATION CONCRETE CURB AND GUTTER
7A	EX PCC PAVEMENT 250 mm	24	EX CONCRETE MEDIAN
9	EX TEMPORARY PAVEMENT		

NOTES:
ALL DIMENSIONS ARE IN MILLIMETERS (mm) UNLESS OTHERWISE STATED.

REVISIONS	
NAME	DATE

URS
URS CORPORATION
DECATUR, ILLINOIS

ILLINOIS DEPARTMENT OF TRANSPORTATION
FAI ROUTE 74 (I-74)
EXISTING TYPICAL SECTIONS
ILL. 116 - U.S. 150 - MAIN ST.
SECTIONS C1 & D1

DRAWN BY NIL
DATE 12-20-04
CHECKED BY JJM

...\phase2\rdsegw1\1s1101-5sma.dgn 12/20/2004 3:23:25 PM