68201

F.A.I. RTE.	SECTION	COUNTY	TOTAL SHEETS	SHEET NO.
74	*	TAZEWELL	136	55
STA.		TO STA.		
FED. ROAD DIST. NO.		ILLINOIS	FED. AID PROJECT	

* (90-1DR-2; 90D3,14,14-1DR-1

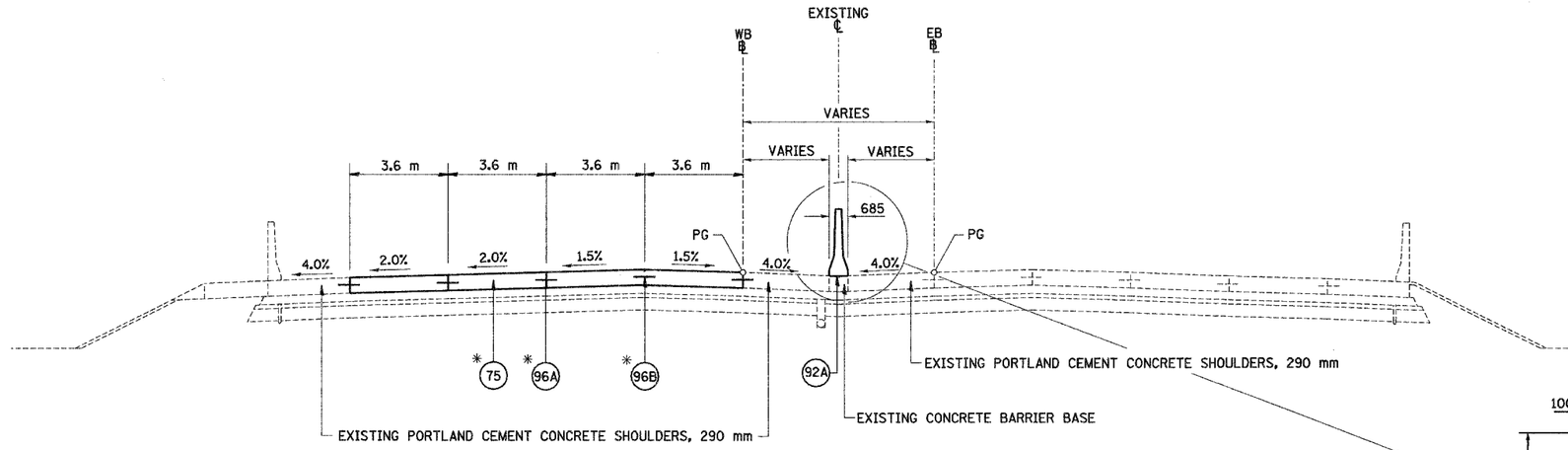

*STA. 152+444.287 TO 152+445.837

**AT RIGHT ANGLES TO RAMP J-4 ℄

TYPICAL SECTION NO. 1

STA. 152+272.200 TO STA. 152+445.837 WB

1

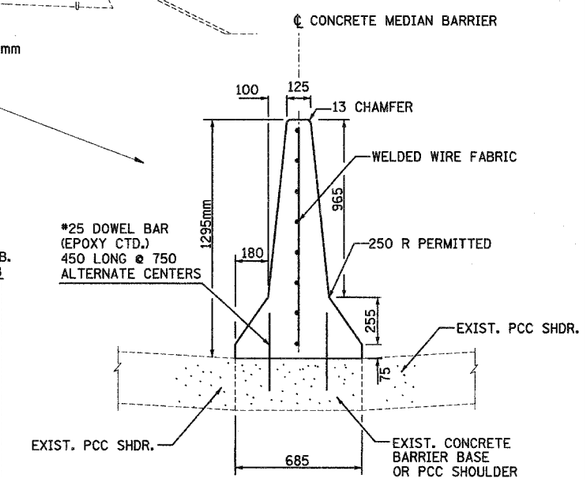

SECTION

TYPICAL CONCRETE BARRIER, DOUBLE FACE (MODIFIED). SEE I-74 STD. 637001-I74.

THE FURNISHING AND PLACING OF WELDED WIRE FABRIC AND DRILLED AND GROUTED DOWEL BARS SHALL BE INCLUDED IN THE COST OF THE CONCRETE BARRIER.

SEE LIGHTING PLANS FOR CONDUIT LOCATION.

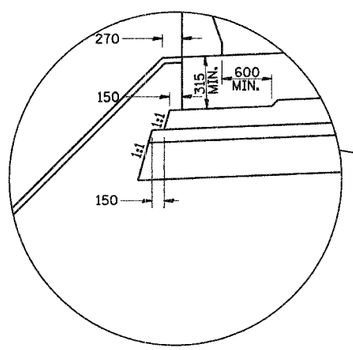

TYPICAL SUB-BASE DETAIL

(TO SHOW DIMENSIONS ONLY)

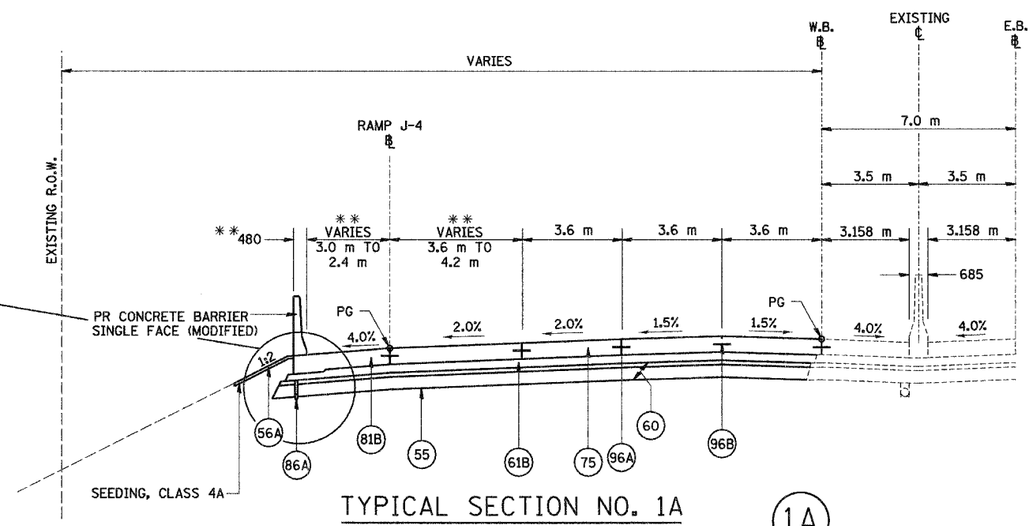

TYPICAL SECTION NO. 1A

STA. 152+445.837 TO STA. 152+475.840 WB

1A

LEGEND

(55) PR GEOTECHNICAL FABRIC FOR GROUND STABILIZATION	(81A) PR PORTLAND CEMENT CONCRETE SHOULDERS 250 MM	(89K) PR COMB. CONCRETE C&G, TYPE B-15.45
(56A) PR FURNISH AND PLACE TOPSOIL, 100 MM	(81B) PR PORTLAND CEMENT CONCRETE SHOULDERS, 290 MM	(92A) PR CONCRETE BARRIER, DOUBLE FACE
(60) PR AGGREGATE SUB-BASE, 300 MM	(82) PR RETAINING WALL (SEE WALL PLANS)	(96A) PR LONGITUDINAL CONSTRUCTION JOINT (TYPICAL)
(61A) PR BITUMINOUS CONCRETE BINDER COURSE, SUPERPAVE, IL-19.OL (LOW ESAL), 100MM	(86A) PR PIPE UNDERDRAINS, 100 MM	(96B) PR SAWED LONGITUDINAL JOINT (TYPICAL)
(61B) PR BITUMINOUS CONCRETE BINDER COURSE, SUPERPAVE, IL-19.OL (LOW ESAL), 150MM	(86B) PR PIPE UNDERDRAINS, 150 MM	
(71D) PR PORTLAND CEMENT CONCRETE PAVEMENT 250MM (JOINTED)	(88) PR CONCRETE GUTTER, TYPE A (MODIFIED)	
(75) PR CONTINUOUSLY REINFORCED PORTLAND CEMENT CONCRETE PAVEMENT, 290 MM	(89B) PR COMB. CONCRETE C&G, TYPE B-15.60	
(79) PR AGGREGATE SHOULDERS, TYPE B		

NOTES:

SHOULDERS ADJACENT TO THE HIGH SIDE OF SUPERELEVATED PAVEMENT SHALL BE 4% OR 8% MINUS THE RATE OF SUPER, WHICHEVER IS LESS. ADJACENT TO THE LOW SIDE OF SUPERELEVATED PAVEMENT SHOULDERS SHALL HAVE A SLOPE OF 4% OR THE RATE OF SUPER, WHICHEVER IS GREATER.

ALL DIMENSIONS ARE IN MILLIMETERS (mm) UNLESS OTHERWISE STATED.

(60) IS SHOWN IN TWO LAYERS TO DENOTE THE TWO GRADATIONS THAT MAKE UP THIS PAY ITEM.

REVISIONS	
NAME	DATE

URS
URS CORPORATION
ST. LOUIS, MO

ILLINOIS DEPARTMENT OF TRANSPORTATION
FAI ROUTE 74 (I-74)

PROPOSED TYPICAL SECTIONS
FAI ROUTE 74 (I-74) (WB)
NUMBERS 1 & 1A

DRAWN BY DER
DATE 12-20-04 CHECKED BY MLB

...\phase2\roadway\t11101-5sec.dgn 12/21/2004 8:26:19 AM