68201

| F.A.I. RTE. | SECTION | COUNTY | TOTAL SHEETS | SHEET NO. |
|---|---|---|---|---|
| 74 | * | TAZEWELL | 136 | 70 |
| STA. | | TO STA. | | |
| FED. ROAD DIST. NO. | | ILLINOIS | FED. AID PROJECT | |

*(90-1)R-2; 90(13,14,14-1)R-1

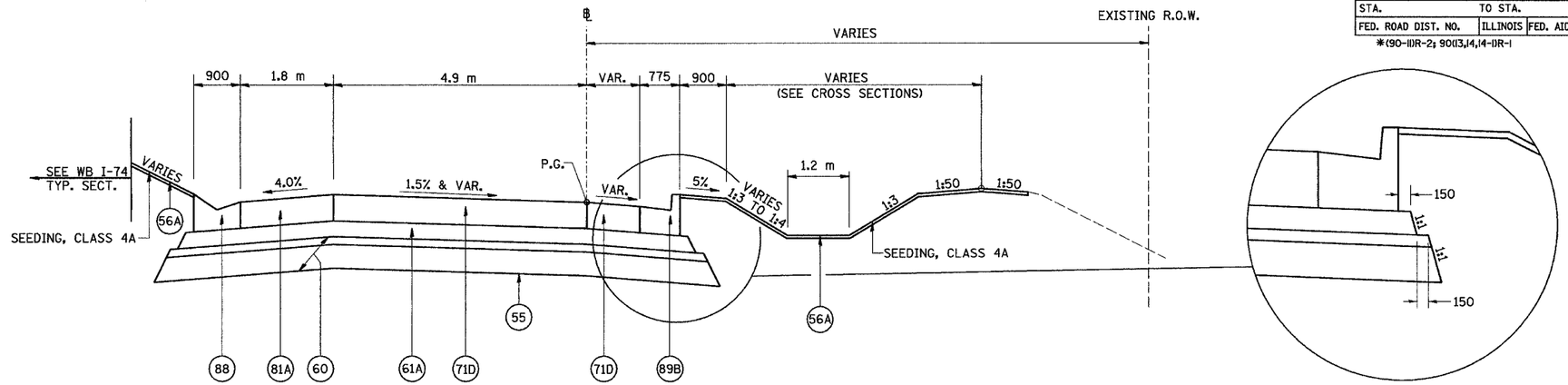


## RAMP J-4

STA. 10+017.094 TO STA. 10+060.198

25B

## TYPICAL SUB-BASE DETAIL

(FOR DIMENSIONS ONLY)

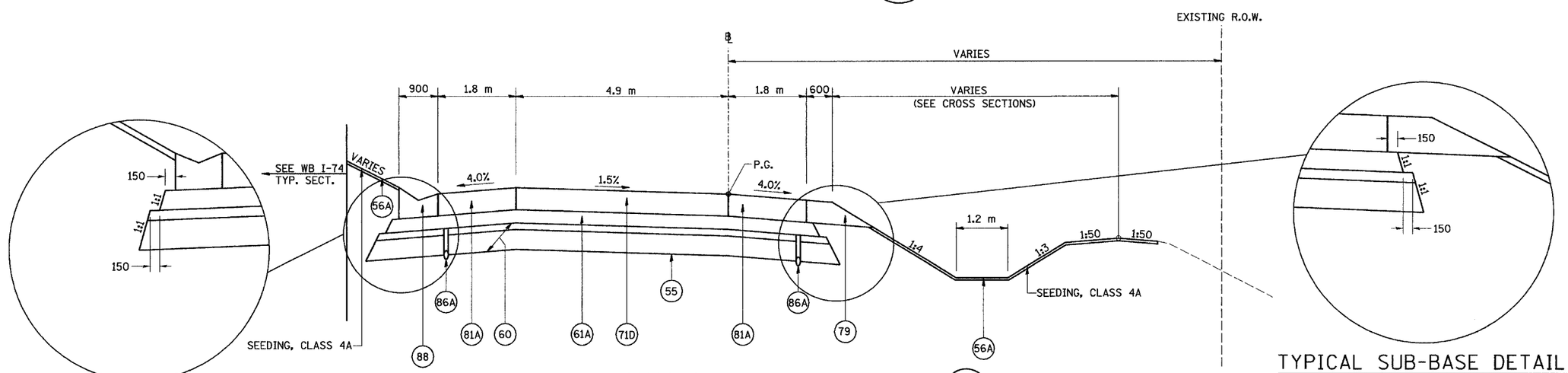


## TYPICAL SUB-BASE DETAIL

(FOR DIMENSIONS ONLY)

## RAMP J-4

STA. 10+060.198 TO STA. 10+082.460

26

## TYPICAL SUB-BASE DETAIL

(FOR DIMENSIONS ONLY)

NOTES: SHOULDERS ADJACENT TO THE HIGH SIDE OF SUPERELEVATED PAVEMENT SHALL BE 4% OR 8% MINUS THE RATE OF SUPER, WHICHEVER IS LESS. ADJACENT TO THE LOW SIDE OF SUPERELEVATED PAVEMENT SHOULDERS SHALL HAVE A SLOPE OF 4% OR THE RATE OF SUPER, WHICHEVER IS GREATER.

ALL DIMENSIONS ARE IN MILLIMETERS (mm) UNLESS OTHERWISE STATED.

(60) IS SHOWN IN TWO LAYERS TO DENOTE THE TWO GRADATIONS THAT MAKE UP THIS PAY ITEM.

## LEGEND

- (55) PR GEOTECHNICAL FABRIC FOR GROUND STABILIZATION
- (56A) PR FURNISH AND PLACE TOPSOIL, 100 MM
- (60) PR AGGREGATE SUB-BASE, 300 MM
- (61A) PR BITUMINOUS CONCRETE BINDER COURSE, SUPERPAVE, IL-19.0L (LOW ESAL), 100MM
- (61B) PR BITUMINOUS CONCRETE BINDER COURSE, SUPERPAVE, IL-19.0L (LOW ESAL), 150MM
- (71D) PR PORTLAND CEMENT CONCRETE PAVEMENT 250MM (JOINTED)
- (75) PR CONTINUOUSLY REINFORCED PORTLAND CEMENT CONCRETE PAVEMENT, 290 MM
- (79) PR AGGREGATE SHOULDERS, TYPE B
- (81A) PR PORTLAND CEMENT CONCRETE SHOULDERS 250 MM
- (81B) PR PORTLAND CEMENT CONCRETE SHOULDERS, 290 MM
- (82) PR RETAINING WALL (SEE WALL PLANS)
- (86A) PR PIPE UNDERDRAINS, 100 MM
- (86B) PR PIPE UNDERDRAINS, 150 MM
- (88) PR CONCRETE GUTTER, TYPE A (MODIFIED)
- (89B) PR COMB. CONCRETE C&G, TYPE B-15.60
- (89K) PR COMB. CONCRETE C&G, TYPE B-15.45
- (96A) PR LONGITUDINAL CONSTRUCTION JOINT (TYPICAL)
- (96B) PR SAWED LONGITUDINAL JOINT (TYPICAL)

| REVISIONS | |
|---|---|
| NAME | DATE |
| | |
| | |
| | |
| | |
| | |
| | |
| | |
| | |

URS
URS CORPORATION
ST. LOUIS, MO

ILLINOIS DEPARTMENT OF TRANSPORTATION
FAI ROUTE 74 (I-74)

PROPOSED TYPICAL SECTIONS
RAMP J-4
NUMBERS 25B & 26

DRAWN BY DER
CHECKED BY MLB
DATE 12/20/04

..\pubsea\proj\ewpsa\1s1101-5mw.dgn 12/20/2004 3:20:44 PM