68201

STATE OF ILLINOIS
DEPARTMENT OF TRANSPORTATION

ROUTE NO.	SECTION	COUNTY	TOTAL SHEETS	SHEET NO.
F.A.I. 74	(90-14HB)BR	TAZEWELL	1366	529
FED. ROAD DIST. NO. 7		ILLINOIS	FED. AID PROJECT-	

*m_{14} (E) btwn. Bms. 1 and 2.

*m_{15} (E) btwn. Bms. 2 thru 6.

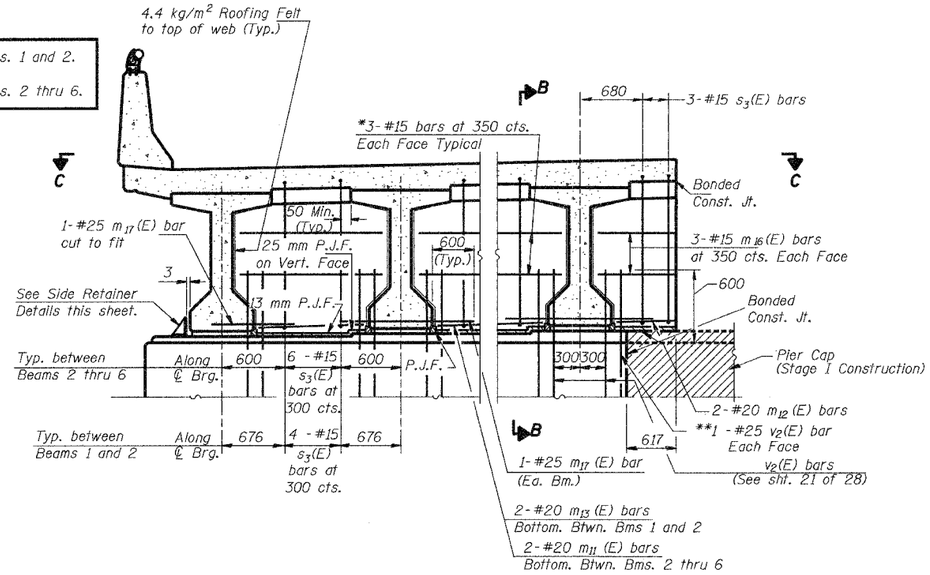

DIAPHRAGM AT PIER

(Fixed)

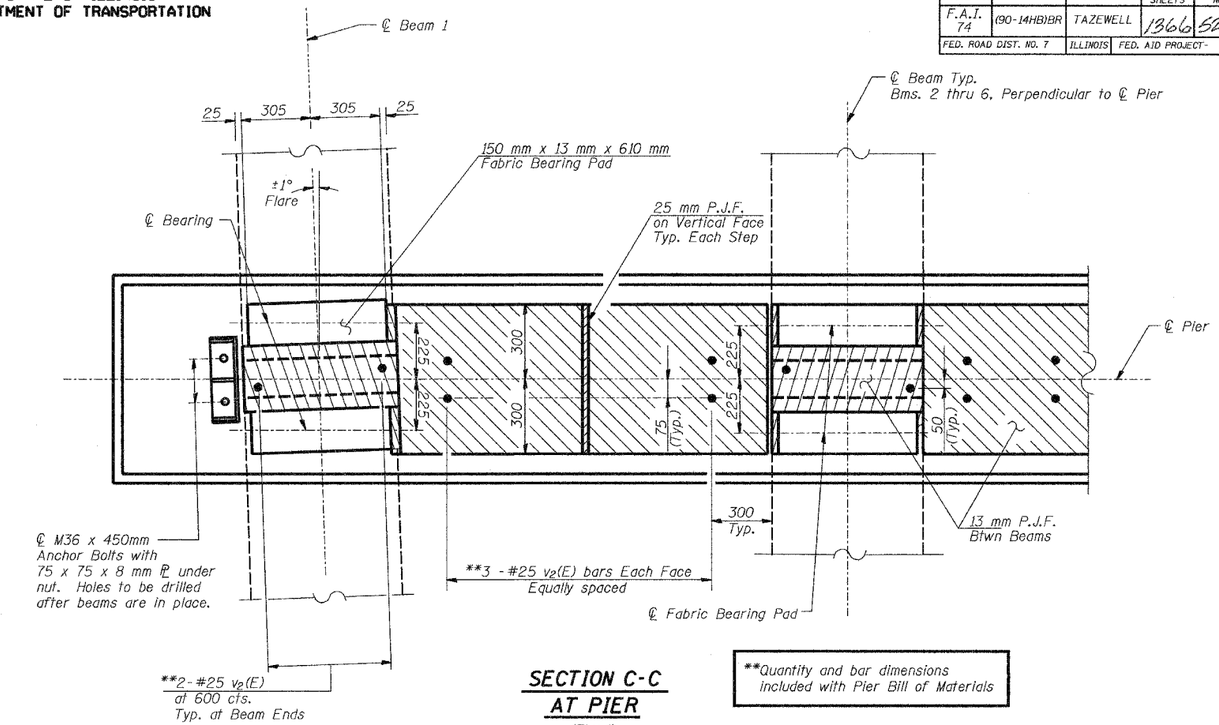

SECTION C-C AT PIER

(Fixed)

**Quantity and bar dimensions included with Pier Bill of Materials

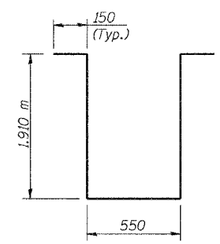

s_3(E) BAR

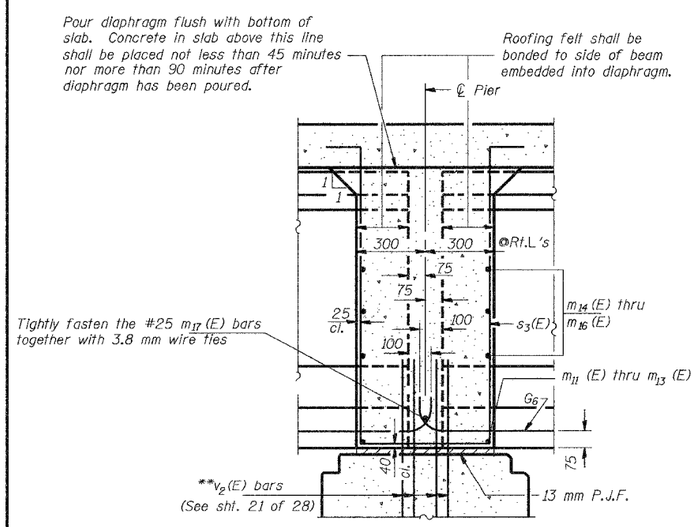

Note: Horizontal dimensions for Sec. B-B are along ℄ of Beam unless otherwise noted.

SECTION B-B AT PIER

(Fixed)

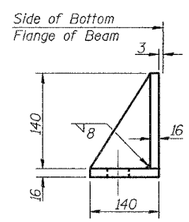

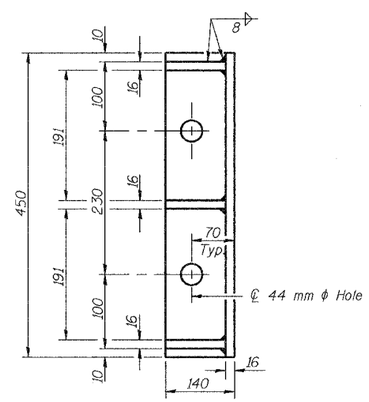

SIDE RETAINER

Equivalent rolled angle with stiffeners will be allowed in lieu of welded plates.

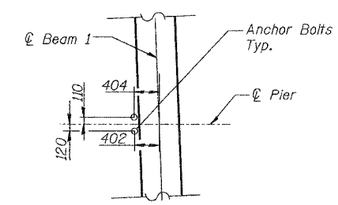

ANCHOR BOLT LOCATION

Notes:

Reinforcement bars in diaphragm are billed with superstructure on sheet 9 of 28.

Concrete in diaphragm is included with Concrete Superstructure on sheet 9 of 28.

The s_3(E) bars shall be placed parallel to the Beams. Spacing for these bars shall be at right angles to the beams.

Cost of 4.4 kg/m² roofing felt is included with Concrete Superstructure.

All dimensions are in millimeters (mm) except as noted.

The side retainer shall be galvanized after shop fabrication according to AASHTO M 111 and ASTM A 385. Cost of side retainer and anchor bolts shall be included with Concrete Structures.

See Sheet 22 of 28 for anchor bolt details.

MIN. BAR LAP

#20 bar = 850

DIAPHRAGM DETAILS AT PIER

Date / Revisions			
Designed	TDN	INTERSTATE 74 AND RAMPS L-1 AND L-4 OVER E. WASHINGTON STREET F.A.I. RTE. 74 SECTION (90-14HB)BR TAZEWELL COUNTY STATION 153+868.540 STRUCTURE NO. 090-0163 (WB)	Sheet No. 12 of 28
Drawn	BKN		
Checked	DCS		
Approved	KWB		
Prepared By: URS		3040 North University Avenue Decatur, Il. 62526	URS Job No. 2100001243.01

C:\dgn\tiger\111112-G0000163.dgn 12/17/2002 8:46:12 AM