68201

ROUTE NO.	SECTION	COUNTY	TOTAL SHEETS	SHEET NO.
FAI 74	★	TAZEWELL	1366	605
FED. ROAD DIST. NO. 7		ILLINOIS	FED. AID PROJECT-	

SHEET NO. 4
21 SHEETS

★90-11HB-5

Panel	Soldier Pile Designation	Station	Offset to Working Point	Pile Size	Top of Soldier Pile Elevation	Bottom of Soldier Pile Elevation	Top of Encasement Concrete Elevation	Estimated Length of Soldier Pile (m)	Diameter of Shaft Excavation (m)	Number of Shear Connectors
A	A1	10+212.93	3.523	W310x158	149.365	145.965	148.056	3.400	0.610	6
	A2	10+210.69	3.500	W310x158	150.535	145.935	148.056	4.600	0.610	10
	A3	10+208.47	3.513	W310x158	151.705	145.905	148.135	5.800	0.610	14
	A4	10+206.21	3.512	W310x158	152.875	145.875	148.213	7.000	0.610	18
B	B1	10+204.52	3.482	2-W250x80	153.715	145.815	148.292	7.900	0.914	40
	B2	10+202.08	3.466	2-W250x80	154.935	145.835	148.348	9.100	0.914	48
	B3	10+199.65	3.515	2-W250x80	156.349	145.749	148.430	10.600	0.914	56
C	C1	10+197.97	3.610	2-W250x80	156.351	145.751	148.512	10.600	0.914	56
	C2	10+195.80	3.732	2-W250x80	156.354	145.654	148.568	10.700	0.914	56
	C3	10+193.64	3.854	2-W250x80	156.356	145.656	148.633	10.700	0.914	56
	C4	10+191.47	3.977	2-W250x80	156.359	145.659	148.697	10.700	0.914	56
D	D1	10+189.78	4.045	2-W250x80	156.363	145.663	148.762	10.700	0.914	56
	D2	10+187.34	4.057	2-W250x80	156.371	145.571	148.818	10.800	0.914	56
	D3	10+184.90	4.068	2-W250x80	156.379	145.579	148.899	10.800	0.914	56
	D4	10+182.46	4.079	2-W250x80	156.387	145.487	148.981	10.900	0.914	56
E	E1	10+180.78	4.087	2-W250x80	156.390	145.490	149.062	10.900	0.914	52
	E2	10+178.34	4.099	2-W250x80	156.390	145.490	149.113	10.900	0.914	52
	E3	10+175.90	4.110	2-W250x80	156.390	145.390	149.181	11.000	0.914	52
	E4	10+173.46	4.121	2-W250x80	156.390	145.390	149.249	11.000	0.914	52
F	F1	10+171.78	4.125	2-W250x80	156.386	145.386	149.317	11.000	0.914	52
	F2	10+169.34	4.136	2-W250x80	156.375	145.375	149.361	11.000	0.914	52
	F3	10+166.90	4.147	2-W250x80	156.365	145.365	149.424	11.000	0.914	52
	F4	10+164.46	4.159	2-W250x49	156.354	145.354	149.486	11.000	0.762	52
G	G1	10+162.78	4.167	2-W250x49	156.343	145.343	149.549	11.000	0.762	52
	G2	10+160.34	4.178	2-W250x49	156.321	145.421	149.588	10.900	0.762	48
	G3	10+157.90	4.190	2-W250x49	156.299	145.399	149.639	10.900	0.762	48
	G4	10+155.46	4.201	2-W250x49	156.277	145.377	149.691	10.900	0.762	48
H	H1	10+153.78	4.209	2-W250x49	156.260	145.360	149.742	10.900	0.762	48
	H2	10+151.34	4.220	2-W250x49	156.230	145.430	149.775	10.800	0.762	48
	H3	10+148.90	4.232	2-W250x49	156.200	145.400	149.818	10.800	0.762	48
	H4	10+146.46	4.243	2-W250x49	156.170	145.370	149.862	10.800	0.762	48
I	I1	10+144.78	4.251	2-W250x49	156.144	145.444	149.905	10.700	0.762	48
	I2	10+142.34	4.262	2-W250x49	156.098	145.498	149.931	10.600	0.762	48
	I3	10+139.90	4.274	2-W250x49	156.052	145.452	149.964	10.600	0.762	44
	I4	10+137.46	4.285	2-W250x49	156.006	145.506	149.996	10.500	0.762	44
J	J1	10+135.78	4.293	2-W250x49	155.967	145.567	150.029	10.400	0.762	44
	J2	10+133.34	4.304	2-W250x49	155.899	145.599	150.048	10.300	0.762	44
	J3	10+130.90	4.316	2-W250x49	155.831	145.631	150.073	10.200	0.762	44
	J4	10+128.46	4.327	2-W250x49	155.763	145.663	150.073	10.100	0.762	44
K	K1	10+126.78	4.335	2-W250x49	155.713	145.713	150.122	10.000	0.762	44
	K2	10+124.34	4.346	2-W250x49	155.634	145.734	150.136	9.900	0.762	40
	K3	10+121.90	4.358	2-W250x49	155.556	145.856	150.152	9.700	0.762	40
	K4	10+119.46	4.369	2-W250x49	155.477	145.877	150.168	9.600	0.762	40
L	L1	10+117.78	4.378	2-W250x49	155.420	145.920	150.184	9.500	0.762	40
	L2	10+115.34	4.392	2-W250x49	155.334	145.934	150.194	9.400	0.762	40
	L3	10+112.90	4.406	2-W250x49	155.247	145.947	150.205	9.300	0.762	40
	L4	10+110.46	4.420	2-W250x49	155.161	145.961	150.215	9.200	0.762	36
M	M1	10+108.79	4.433	2-W250x80	155.097	145.597	150.226	9.500	0.914	36
	M2	10+106.35	4.497	2-W250x80	155.002	145.102	150.251	9.900	0.914	36
	M3	10+103.91	4.548	2-W250x80	154.907	144.907	150.310	10.000	0.914	36
	M4	10+101.47	4.598	2-W250x80	154.812	144.712	150.370	10.100	0.914	36
N	N1	10+099.79	4.628	2-W250x80	154.746	144.546	150.429	10.200	0.914	32
	N2	10+097.35	4.678	2-W250x80	154.649	144.349	150.475	10.300	0.914	32
	N3	10+094.91	4.728	2-W250x49	154.551	144.051	150.548	10.500	0.762	32
	N4	10+092.47	4.778	2-W250x49	154.453	143.853	150.622	10.600	0.762	32
O	O1	10+090.79	4.813	2-W250x49	154.386	143.686	150.695	10.700	0.762	28
	O2	10+088.35	4.864	2-W250x49	154.289	143.489	150.742	10.800	0.762	28
	O3	10+085.91	4.914	2-W250x49	154.191	143.191	150.807	11.000	0.762	28
	O4	10+083.47	4.965	2-W250x49	154.093	142.993	150.873	11.100	0.762	28
P	P1	10+081.80	5.031	W310x158	154.030	146.330	150.938	7.700	0.610	12
	P2	10+079.36	5.090	W310x158	153.943	146.243	150.971	7.700	0.610	12
	P3	10+076.92	5.149	W310x158	153.856	146.256	151.004	7.600	0.610	12
	P4	10+074.48	5.208	W310x158	153.770	146.270	151.036	7.500	0.610	12
Q	Q1	10+072.80	5.259	W310x158	153.709	146.309	151.069	7.400	0.610	12
	Q2	10+070.36	5.345	W310x158	153.620	146.520	151.095	7.100	0.610	10
	Q3	10+067.93	5.432	W310x158	153.530	146.830	151.138	6.700	0.610	10
	Q4	10+065.49	5.519	W310x158	153.441	147.041	151.182	6.400	0.610	10
R	R1	10+063.81	5.582	W310x158	153.376	147.176	151.225	6.200	0.610	10
	R2	10+061.38	5.699	W310x158	153.279	147.479	151.259	5.800	0.610	10
	R3	10+058.94	5.817	W310x158	153.181	147.681	151.313	5.500	0.610	8
	R4	10+056.50	5.935	W310x158	153.083	147.783	151.367	5.300	0.610	8
S	S1	10+054.83	5.992	W250x49	153.016	148.116	151.421	4.900	0.610	8
	S2	10+052.39	6.137	W250x49	152.919	148.419	151.462	4.500	0.610	8
	S3	10+049.95	6.282	W250x49	152.821	148.621	151.527	4.200	0.610	6
	S4	10+047.52	6.427	W250x49	152.723	148.923	151.593	3.800	0.610	6
T	T1	10+045.85	6.537	W250x49	152.657	149.057	151.658	3.600	0.610	6
	T2	10+043.41	6.712	W250x49	152.562	149.362	151.705	3.200	0.610	6
	T3	10+040.98	6.887	W250x49	152.467	149.567	151.778	2.900	0.610	6
	T4	10+038.54	7.062	W250x49	152.372	149.872	151.852	2.500	0.610	6

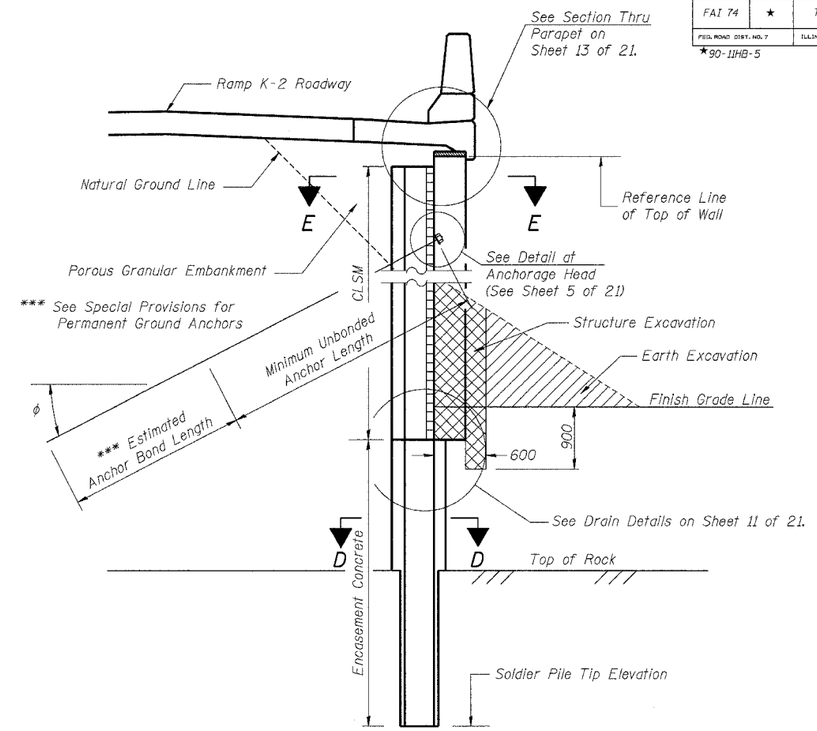

TYPICAL CROSS SECTION

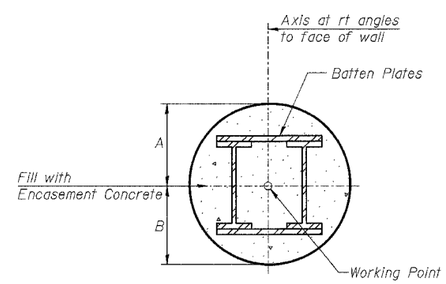

SECTION D-D

Notes:

Hatched area indicates "Earth Excavation." Quantites are included with roadway plans. There shall be no excavation behind the wall.

The Timber Lagging shall be installed as the "Structure Excavation" proceeds down the wall.

If additional length is required, that length shall be added to the bottom of the pile and shall be paid for at the unit price bid for Furnishing Soldier Piles, with the cost of splicing being included in the unit price and the method of splicing approved by the Engineer.

Cross hatched area indicates Structure Excavation.

Soldier pile numbering increases from north to south.

For Section E-E, see sheet 11 of 21.

LIN ENGINEERING.LTD.
210 W. Chestnut
(217) 483-1886
Chatham, Illinois 62629
FAX: (217) 483-4706

Designed By: MTH	Checked By: KRG	Drawn By: JMD
Date: 09/02	File: rp0404-5b0908512.dgn	

REVISIONS
NAME

ILLINOIS DEPARTMENT OF TRANSPORTATION

SOLDIER PILES
RETAINING WALL 81
F.A.I. RTE. 74 (I-74)
SECTION 90-11HB-5
TAZEWELL COUNTY
RAMP J-3 STATION 10+037 TO 10+213
STRUCTURE NUMBER 090-8512