| ROUTE NO. | SECTION | COUNTY | TOTAL SHEETS | SHEET NO. |
|---|---|---|---|---|
| FAI 74 | * | TAZEWELL | 1366 | 608 |
| FED. ROAD DIST. NO. 7 | | ILLINOIS | FED. AID PROJECT- | |

SHEET NO. 7
21 SHEETS

*90-11HB-5

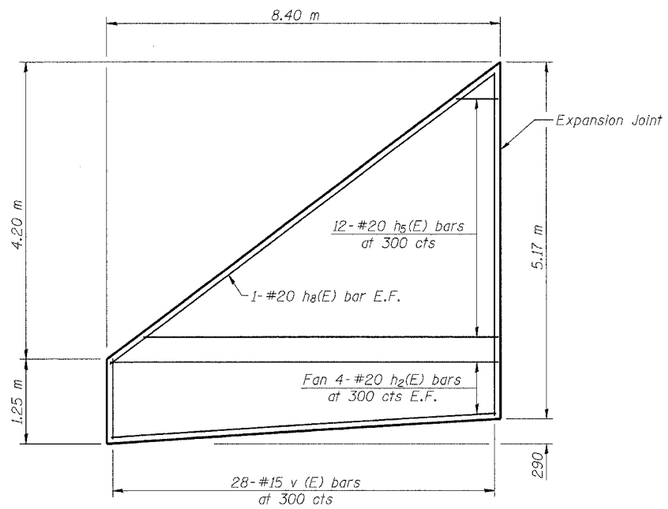


## ELEVATION OF PANEL A
(Looking From Front of Wall)

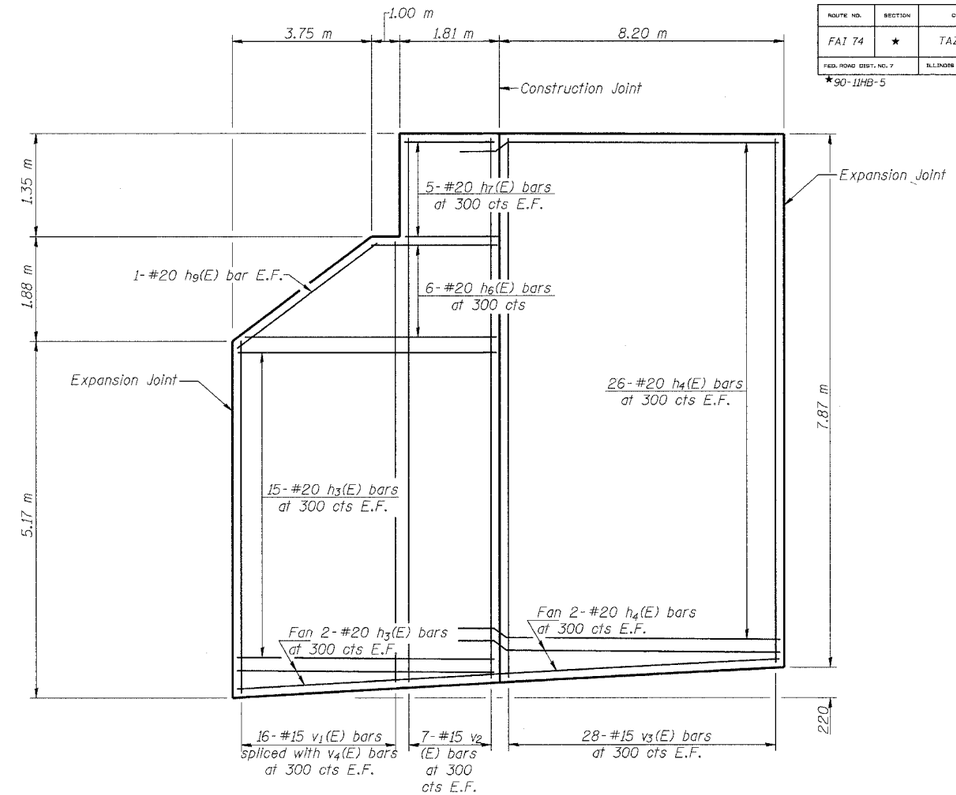


## ELEVATION OF PANELS B & C
(Looking From Front of Wall)

E.F. indicates each face.

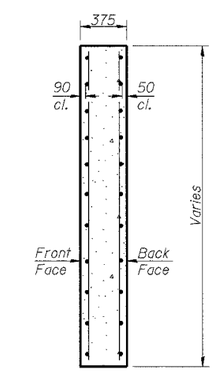


## SECTION THRU PANEL

## BILL OF MATERIAL

| Bar | No. | Size | Length (m) | Shape |
|---|---|---|---|---|
| $h_2(E)$ | 8 | #20 | 8.24 | —— |
| $h_3(E)$ | 34 | #20 | 6.48 | —— |
| $h_4(E)$ | 56 | #20 | 8.94 | —— |
| $h_5(E)$ | 12 | #20 | 8.24 | —— |
| $h_6(E)$ | 6 | #20 | 9.21 | —— |
| $h_7(E)$ | 10 | #20 | 1.71 | —— |
| $h_8(E)$ | 2 | #20 | 9.14 | —— |
| $h_9(E)$ | 2 | #20 | 3.89 | —— |
| | | | | |
| $v(E)$ | 28 | #15 | 6.22 | —— |
| $v_1(E)$ | 16 | #15 | 3.24 | —— |
| $v_2(E)$ | 14 | #15 | 8.00 | —— |
| $v_3(E)$ | 56 | #15 | 7.80 | —— |
| $v_4(E)$ | 32 | #15 | 5.00 | —— |
| | | | | |
| Concrete Structures | | | $m^3$ | 51.7 |
| Reinforcement Bars, Epoxy Coated | | | kg | 3790 |

Reinforcement Bars designated (E) shall be epoxy coated.
Bars indicated thus 1 x 2- #20 etc. indicates 1 line of bars with 2 lengths per line.
The horizontal bars shall be bent at the joints to account for the nonlinear wall alignment. Cost included in "Reinforcement Bars, Epoxy Coated."

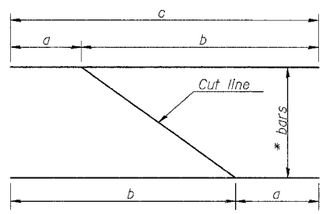


## BAR CUTTING DIAGRAM h
(Length in meters)

| Bar | a | b | c | * |
|---|---|---|---|---|
| $h_5(E)$ | 0.77 | 7.47 | 8.24 | 12 |
| $h_6(E)$ | 2.75 | 6.46 | 9.21 | 6 |

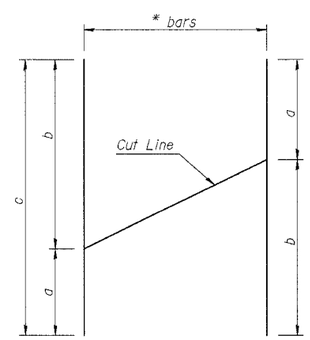


## BAR CUTTING DIAGRAM v(E) BARS
(Length in meters)

| Bar | a | b | c | * |
|---|---|---|---|---|
| $v(E)$ | 1.15 | 5.07 | 6.22 | 28 |
| $v_1(E)$ | 0.84 | 2.40 | 3.24 | 16 |

## MIN BAR LAP
#15 Bars= 640
#20 Bars= 790

Note: Order bars full length. Cut bars as shown & use remainder on the other face of wall.

LIN ENGINEERING, LTD.
210 W. Chestnut
(217) 483-468
Chatham, Illinois 62629
FAX (217) 483-4106

Designed By: MTH | Checked By: KRG | Drawn By: JMD
Date: 09/02 | File: rp0407-5b0908512.dgn

| REVISIONS | |
|---|---|
| NAME | |

ILLINOIS DEPARTMENT OF TRANSPORTATION
CONCRETE FACING
RETAINING WALL 81
F.A.I. RTE. 74 (I-74)
SECTION 90-11HB-5
TAZEWELL COUNTY
RAMP J-3 STATION 10+037 TO 10+213
S.N. 090-8512