F.A. RTE.	SECTION	COUNTY	TOTAL SHEETS	SHEET NO.
			1366	652
STA.		TO STA.		
FED. ROAD DIST. NO.	ILLINOIS	FED. AID PROJECT		

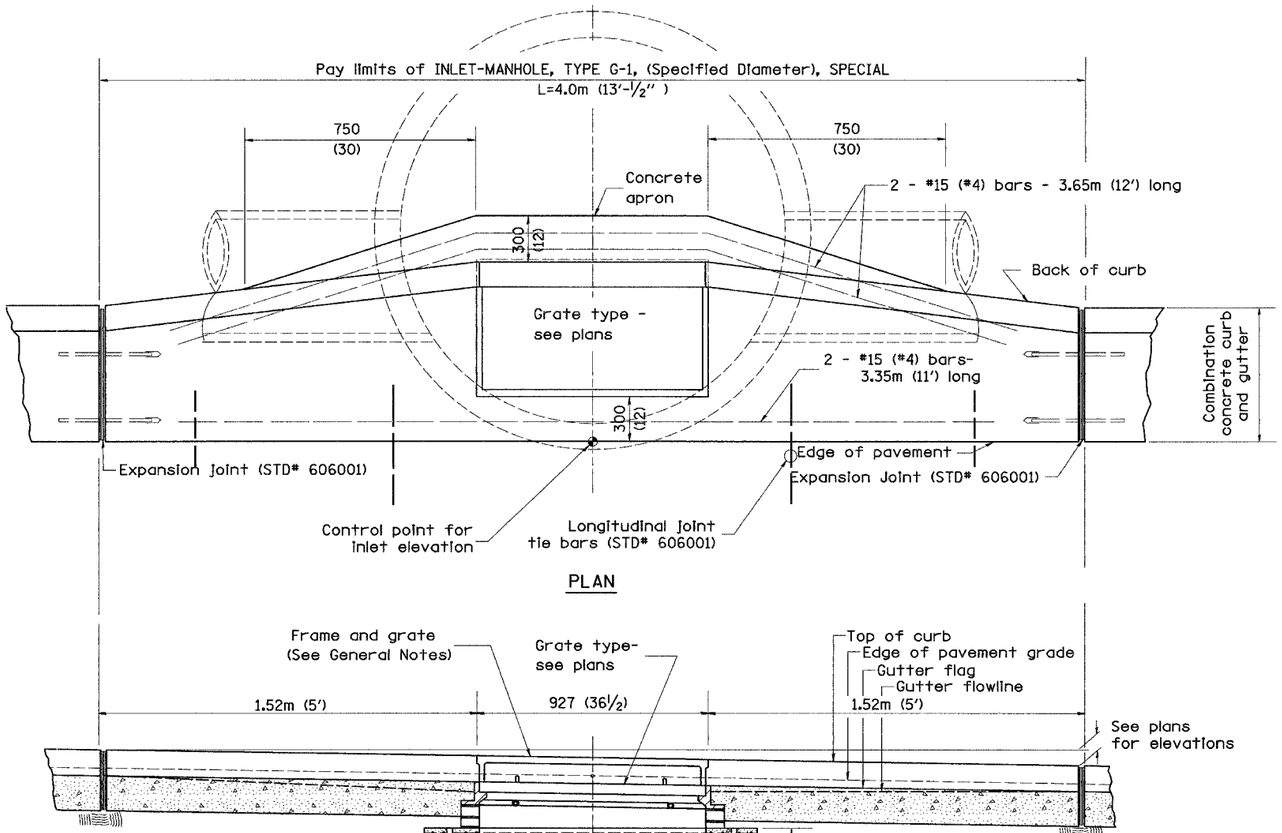

PLAN

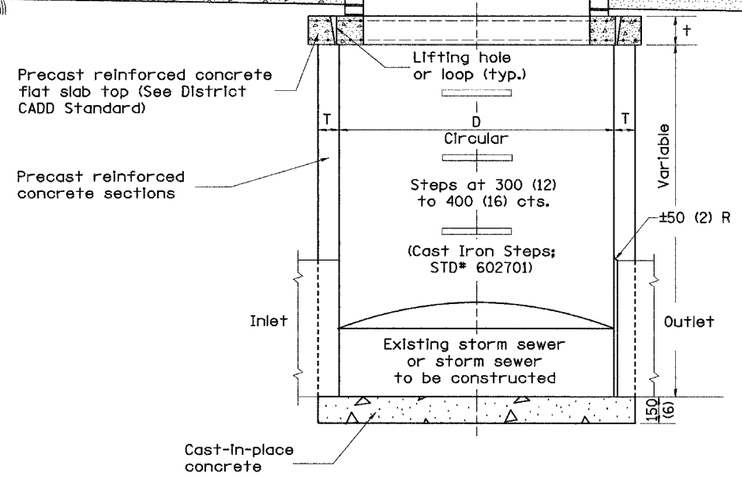

ELEVATION
(FRONT)

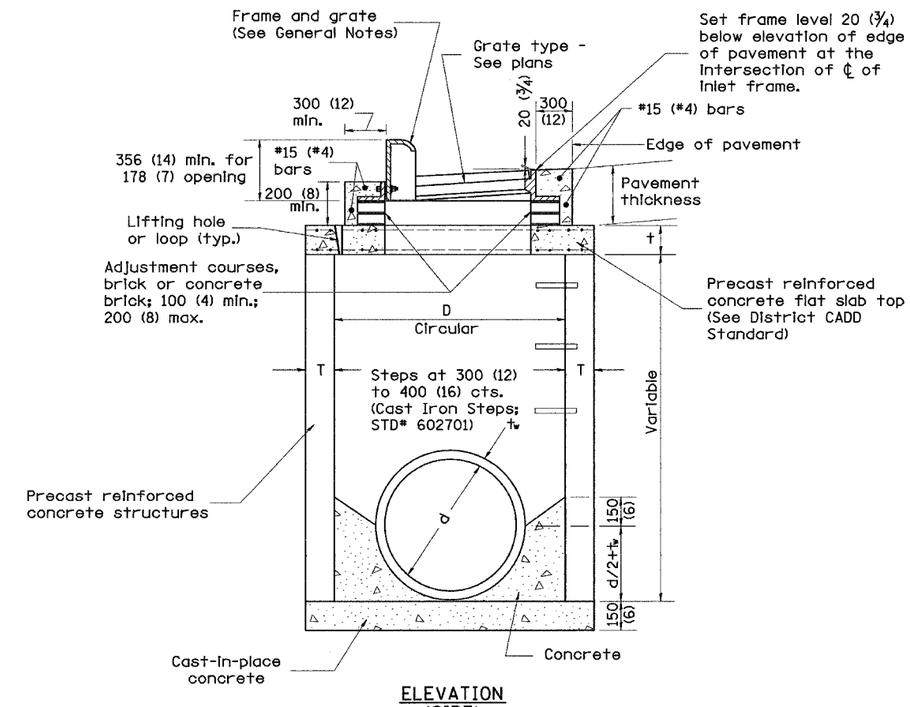

ELEVATION
(SIDE)

TABLE

D	T	t
1.2m (4')	125 (5)	150 (6)
1.5m (5')	150 (6)	200 (8)
1.8m (6')	195 (7 3/4)	200 (8)
2.4m (8')	225 (9)	250 (10)

GENERAL NOTES

1. Inlet-manhole construction shall be in accordance with Section 602 of the Standard Specifications.
2. Combination concrete curb and gutter shall be constructed in accordance with Section 606 of the Standard Specifications.
3. See District CADD Standard 604001-D4 for frame and grates.
4. See District CADD Standard for precast reinforced concrete flat slab top.

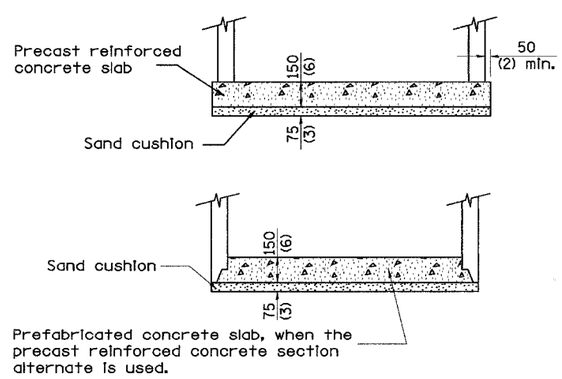

ALTERNATE BOTTOM SLAB

All dimensions are in millimeters (inches) unless otherwise noted.

DATE	REVISIONS	BY
1-1-97	RENUM. B-4.06, NEW REVISION BOX	T.P.
12-1-98	CORRECT E. O. P. NOTE	J.A.
10-99	REVISION TO GENERAL NOTES	J.A.

ILLINOIS DEPARTMENT OF TRANSPORTATION

DISTRICT CADD STANDARD

INLET-MANHOLE, TYPE G-1, SPECIAL

CADD STANDARD 602026-D4

SCALE NOT TO SCALE — DRAWN BY CADD

DATE $$DATE$$ — CHECKED BY

602026-D4

DGN-ONLY

$$DATE$$

4. Include District CADD Standard for frame and grates.
5. Include District CADD Standard for precast reinforced concrete flat slab top.
6. Include District Special Provision. Pay Item includes inlet - manhole, flat slab top, transitional c.c.&g. and frame and grate. All work within pay limits.
7. Specify diameter of inlet - manhole in plans.
8. Specify grate type in plans.

\\cadwy\gsdsis\dsis011.dgn 12/15/2004 2:15:33 PM