F.A.P. ROUTE NO.	SECTION	COUNTY	TOTAL SHEETS	SHEET NO.
0607	01-00014-00-FP	WILL	85	61
STA.	TO STA.			
FED. ROAD DIST. NO.		ILLINOIS	FED AID PROJECT CMF-0607 (070)	

CONTRACT NO. 83786

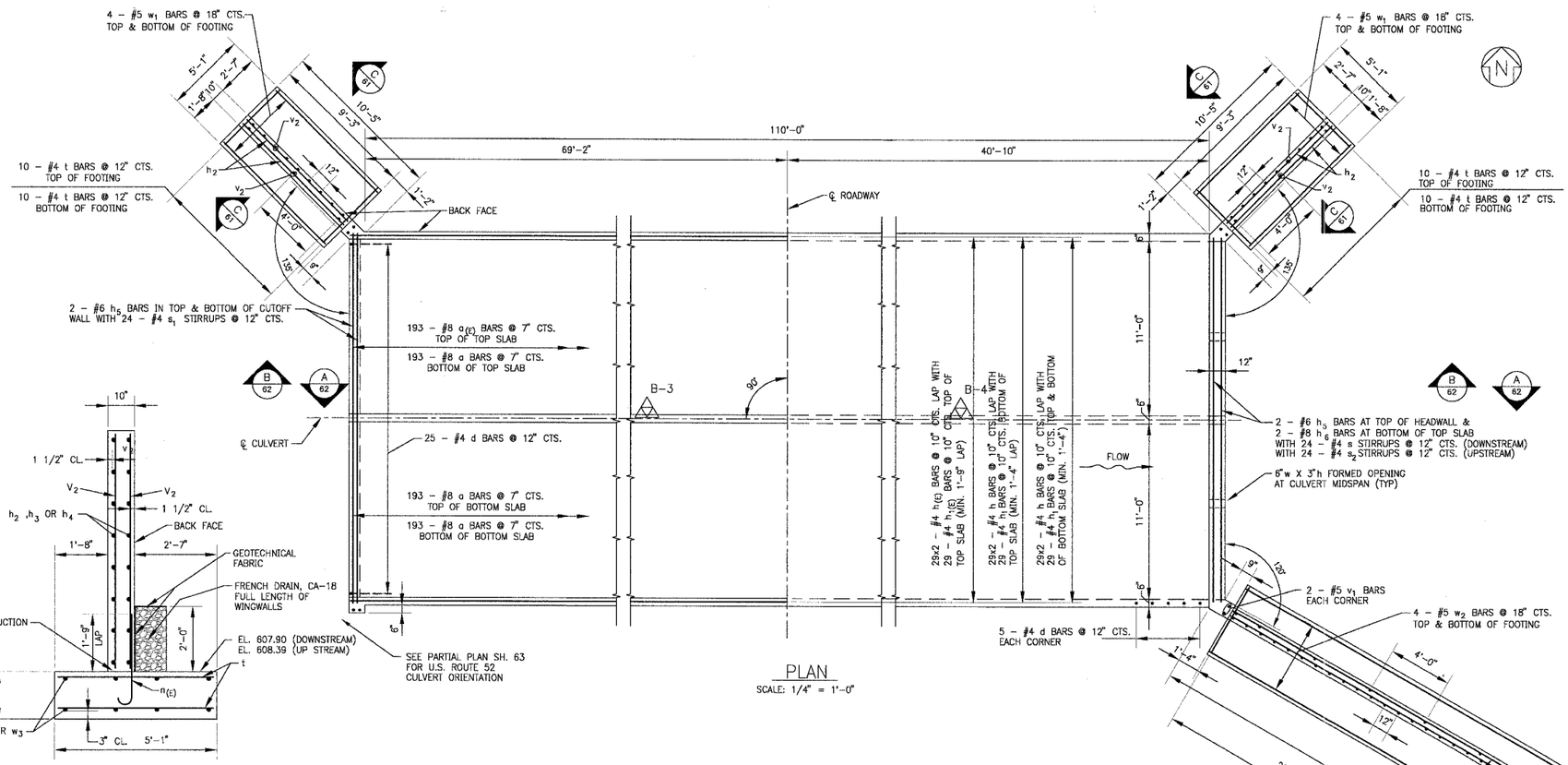

PLAN
SCALE: 1/4" = 1'-0"

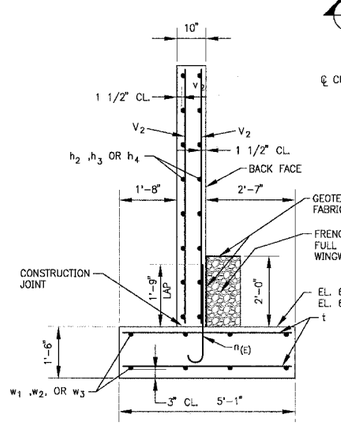

SECTION C/61
SCALE: 1/2"=1'-0"

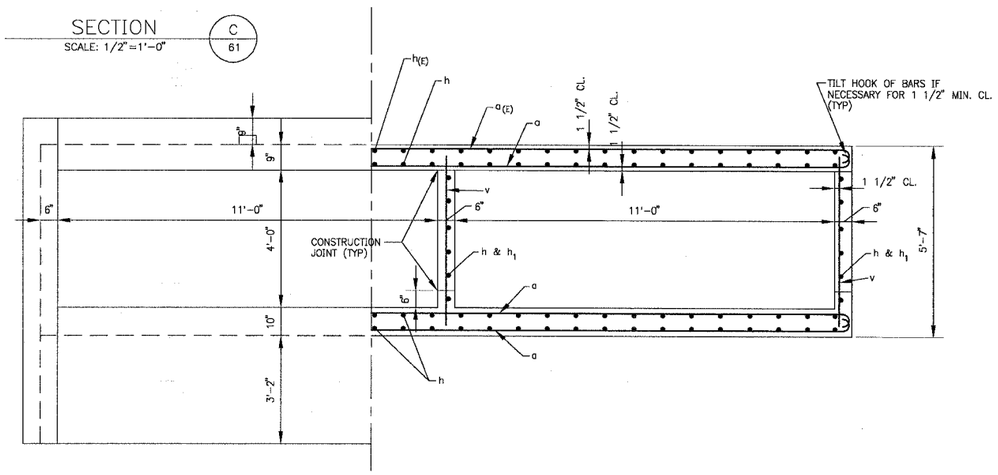

PARTIAL END ELEVATION
SCALE: 1/2" = 1'-0"

PARTIAL SECTION THRU BARREL
(WINGWALL AND CUT OFF WALL NOT SHOWN)
SCALE: 1/2" = 1'-0"

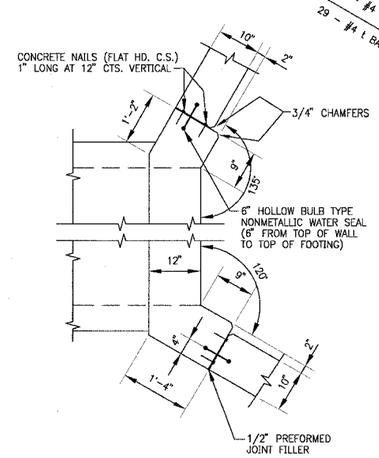

CORNER DETAIL
SCALE: 3/4" = 1'-0"

CONSTRUCTION SPECIFICATIONS

PERFORM WORK IN ACCORDANCE WITH THE ILLINOIS DEPARTMENT OF TRANSPORTATION STANDARD SPECIFICATIONS FOR ROAD AND BRIDGE CONSTRUCTION ADOPTED JANUARY 1, 2002, SUPPLEMENTAL SPECIFICATIONS AND RECURRING SPECIAL PROVISIONS ADOPTED JANUARY 1, 2004 AND INSERTED SPECIAL PROVISIONS UPDATED MAY 6, 2004.

DESIGN STRESSES

f_y = 60,000 P.S.I.
f'_c = 3,500 P.S.I.

ALLOWABLE NET SOIL BEARING PRESSURE = 2,500 P.S.F. MINIMUM

LOADING HS20-44

ALLOW 50 LB/SF FOR FUTURE WEARING SURFACE

NOTES:

1. SEE GENERAL NOTES ON SHEET 58
2. REINFORCEMENT BARS DESIGNATED (E) SHALL BE EPOXY COATED.
3. BARS INDICATED THUS 12x4 – #5 ETC. INDICATES 12 LINES OF BARS WITH 4 LENGTHS PER LINE.

WATERWAY INFORMATION

DRAINAGE AREA	1.9	SQ. MILES
PROVIDED OPENING	88	SQ. FT.
DESIGN DISCHARGE	445	CFS
DESIGN CREATED HEAD	0.2	FT.
100-YR. DISCHARGE	550	CFS
100-YR. CREATED HEAD	0.3	FT.

COPYRIGHT © 2004 BY BAXTER & WOODMAN, INC.
STATE OF ILLINOIS – PROFESSIONAL DESIGN FIRM
LICENSE NO. – 184-001012 – EXPIRES 4/30/2005

CONSULTANTS	REV. NO.	DATE	DESCRIPTION
	1	12-21-04	PER IDOT REVIEW

* REFER TO EQUIPMENT MANUFACTURER'S SHOP DRAWINGS

DRAWING FILE: BOXCULV-3.DWG | PLOTTED BY: DEK 16/DEC/04 08:47

BAXTER & WOODMAN Consulting Engineers

Baxter & Woodman
Crystal Lake, Illinois 815.459.1260
Burlington, Wisconsin 262.763.7834
Makena, Illinois 708.478.2090
DeKalb, Illinois 815.787.3111
Crayslake, Illinois 847.223.5088
Rockford, Illinois 815.489.1551

VILLAGE OF SHOREWOOD, ILLINOIS
U.S. ROUTE 52 IMPROVEMENTS

RIVER ROAD
BOX CULVERT @ STA. 55+48.46
PLAN AND DETAILS

DESIGNED BY BAB	SCALE AS NOTED
DRAWN BY DEK	PROJECT NO. 010665
CHECKED BY MHY	SHEET NO.
DATE 10-05-04	61 OF 85