ROUTE NO.	SECTION	COUNTY	TOTAL SHEETS	SHEET NO.
FAS 292 (CH 49)	*	GRUNDY	17	12
FED. ROAD DIST. NO. 7		ILLINOIS	PROJECT	BRS-292(101)

SHEET NO. 6
8 SHEETS

*03-00127-00-BR
CONTRACT #87282

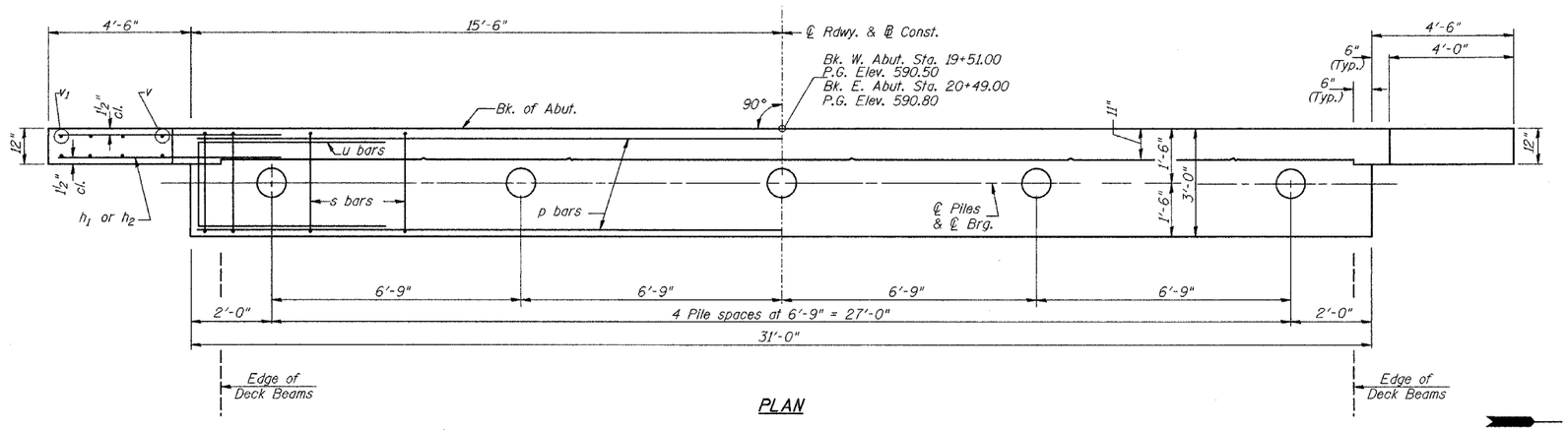

PLAN

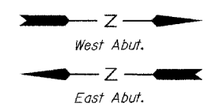

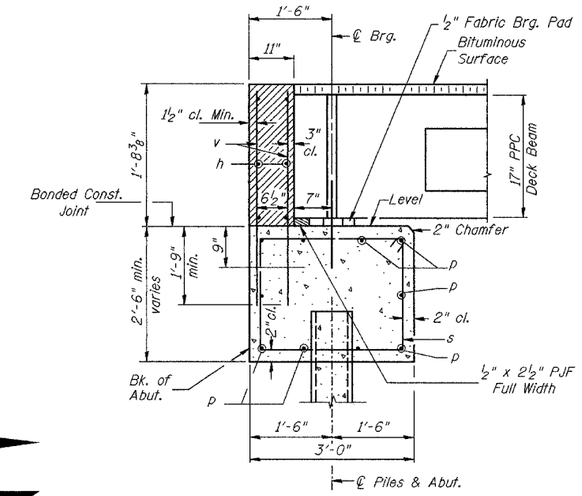

SECTION THRU ABUT.

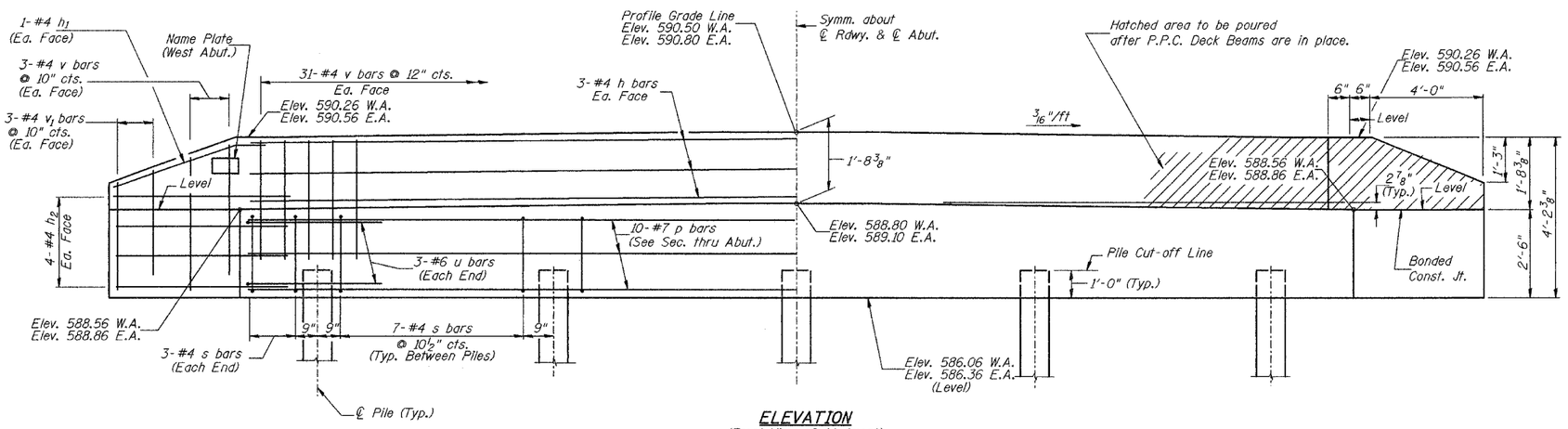

ELEVATION
(Front View of Abutment)

TWO ABUTMENTS BILL OF MATERIAL

BAR	NO.	SIZE	LENGTH	SHAPE
h	12	#4	30'-8"	
h_1	8	#4	6'-2"	
h_2	32	#4	6'-6"	
p	20	#7	30'-8"	
s	68	#4	10'-5"	
u	12	#6	11'-7"	
v	148	#4	3'-5"	
v_1	24	#4	2'-8"	
① Concrete Structures			CU YD	23.8
Reinforcement Bars			POUND	2,730
Name Plates			EACH	1
Furnishing Metal Pile Shells 12"			FOOT	232
Driving and Filling Shells			FOOT	232
Test Pile Metal Shells			EACH	1

① See Special Provisions

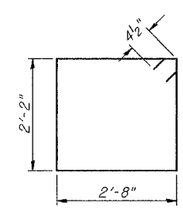

BAR s

NOTES

1. The Backwall and the portion of the Wingwalls above the bonded construction joint shall be cast against the in-place beam.
2. Reinforcement bars shall conform to A.A.S.H.T.O. M-31 or M-322, Grade 60.

DESIGN STRESSES

f'c = 3,500 p.s.i.
fy = 60,000 p.s.i.

PILE DATA

Type: 12"ϕ Metal Shell
Capacity: 25 Ton
Est. Length: 28' (West Abut.)
24' (East Abut.)
No. Req'd.: 10 (Includes 1 Test Pile at West Abut.)

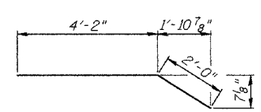

BAR h_1

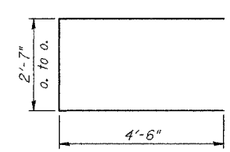

BAR u

ABUTMENTS
F.A.S. 292 (C.H. 49) OVER GOOSEBERRY CREEK
SECTION 03-00127-00-BR
GRUNDY COUNTY
STATION 20+00.00

22118006