EXISTING TYPICAL CROSS SECTION ①

STATION	TO	STATION
		100+40.00 (BK)
232+58.84 (AH)		100+32.20 (BK) ②
289+90.00		297+00.00 ②
303+50.00		308+59.63

STA EQN 100+40.00(BK) = 232+58.84(AH)
STA EQN 100+32.20(BK) = 183+20.00(AH)

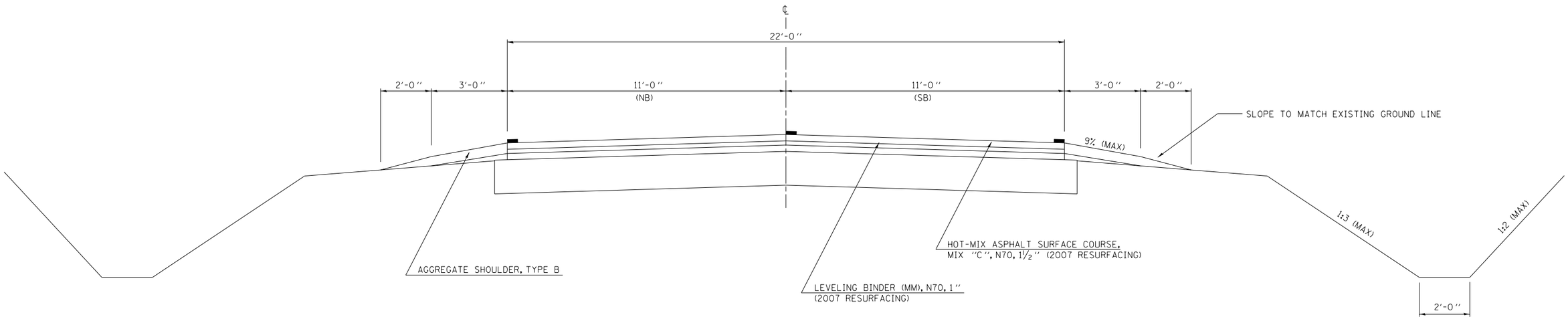

EXISTING TYPICAL CROSS SECTION ②

STATION	TO	STATION
① 183+20.00 (AH)		289+90.00 ①
① 297+00.00		298+02.49(BK)
298+05.65 (AH)		303+50.00 ①

STA EQN 298+02.49(BK) = 298+05.65(AH)

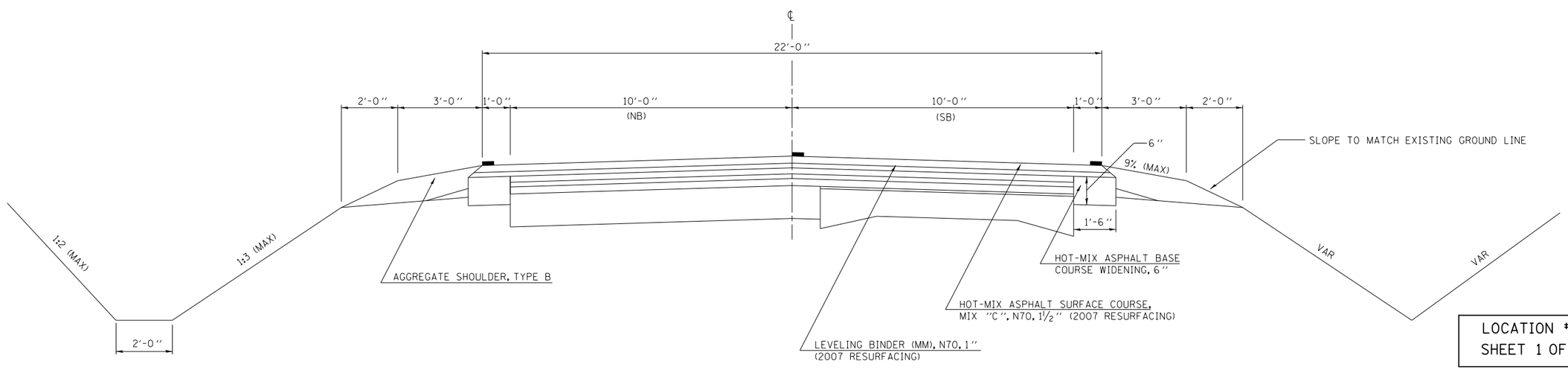

LOCATION #2
SHEET 1 OF 1

• D5 CRACK & JOINT SEAL 2011-2
•• CHAMPAIGN, DOUGLAS, EDGAR & VERMILION

FILE NAME = c:\pw_work\pwidot\piersonbr\d0252772\D570881-typical.dgn	USER NAME = piersonbr	DESIGNED -	REVISED -	STATE OF ILLINOIS DEPARTMENT OF TRANSPORTATION	TYPICAL CROSS SECTIONS – LOCATION #2	F.A. RTE.	SECTION	COUNTY	TOTAL SHEETS / SHEET NO.
		DRAWN -	REVISED -			VAR.	•	••	29 / 15
	PLOT SCALE = 40.0000 ' / in.	CHECKED -	REVISED -					CONTRACT NO. 70881	
	PLOT DATE = 2/4/2011	DATE -	REVISED -		SCALE: SHEET NO. OF SHEETS STA. TO STA.		ILLINOIS FED. AID PROJECT		