STATE OF ILLINOIS
DEPARTMENT OF TRANSPORTATION

NOTES:

1. Any reinforcement bars that are damaged during concrete removal operations shall be repaired or replaced using an approved bar splicer or anchorage system. Cost included with "Concrete Removal".

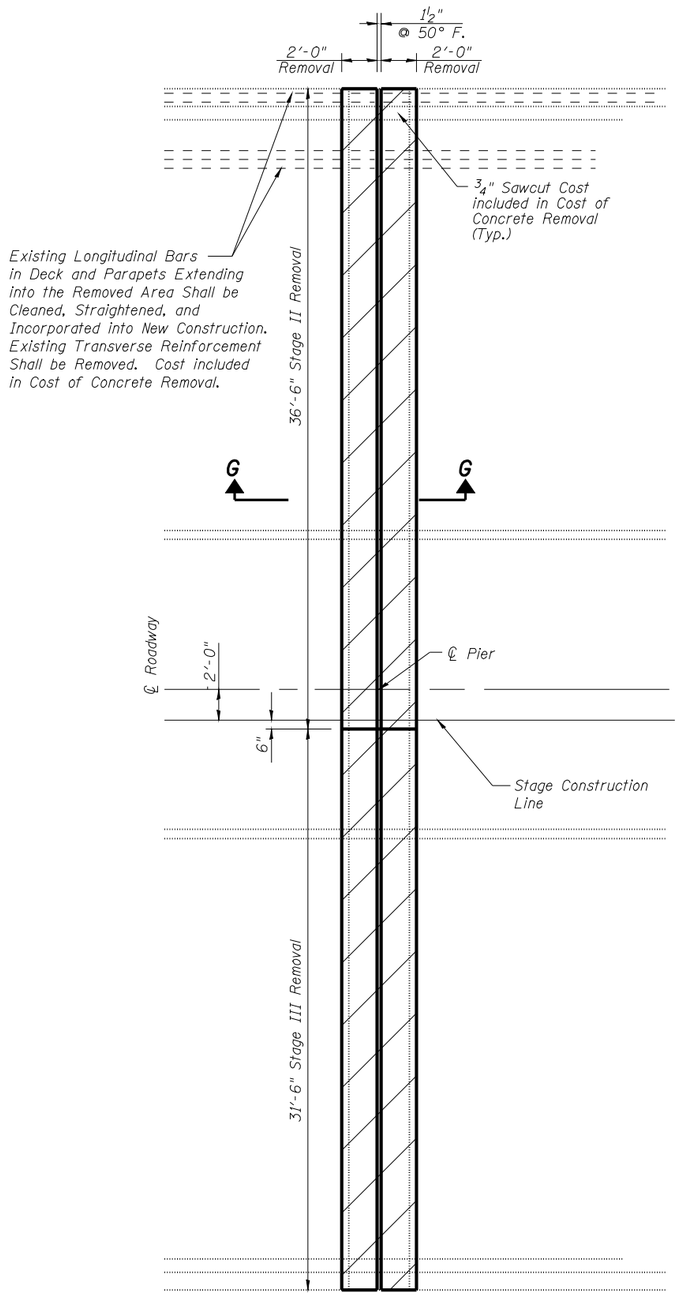

CONCRETE REMOVAL PLAN

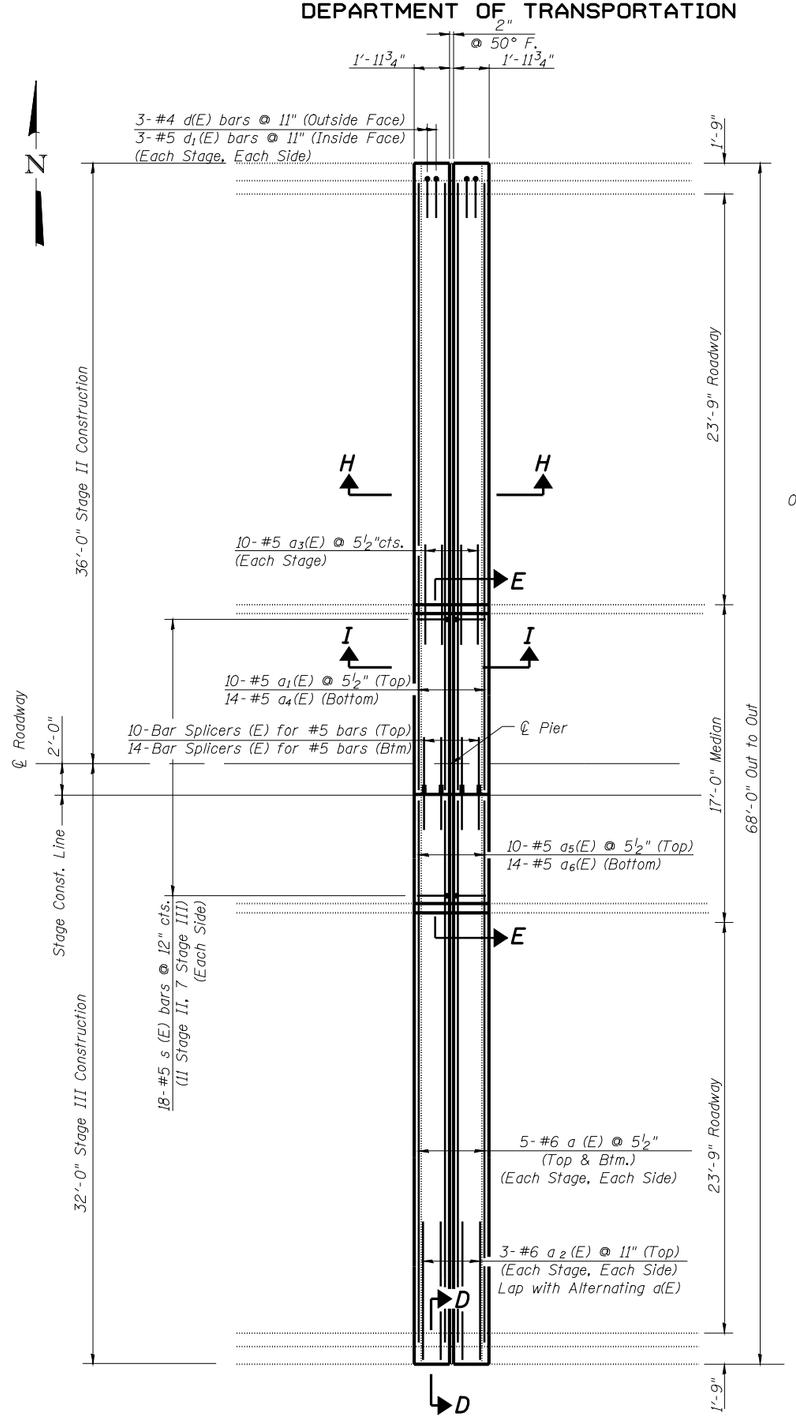

CONCRETE REPLACEMENT PLAN

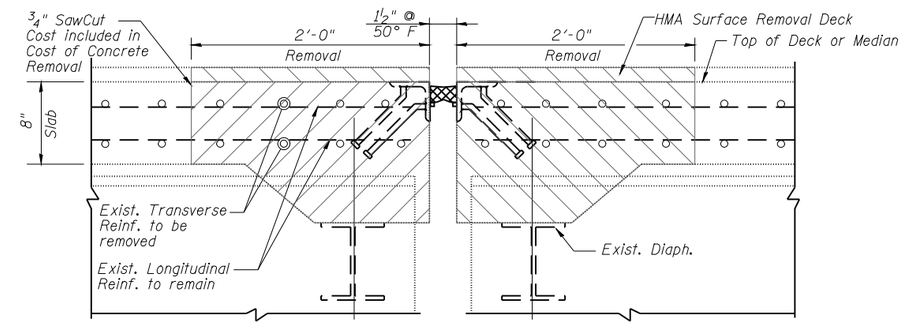

SECTION G-G
(Showing Removal at deck, Removal at Median Similar)

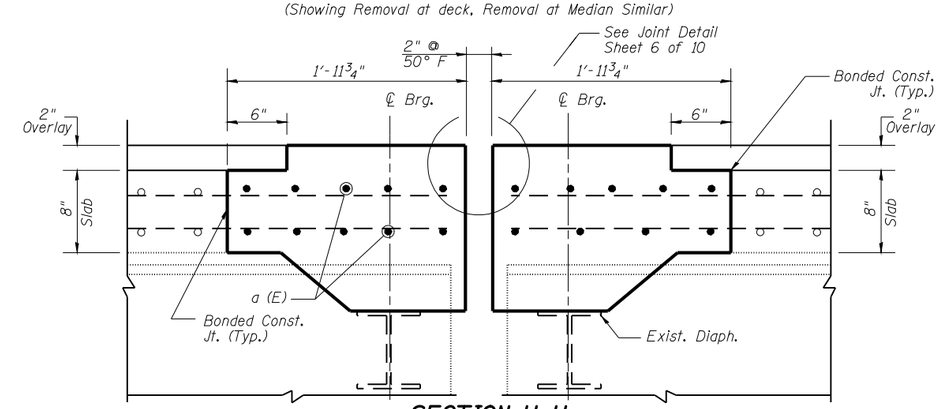

SECTION H-H
(Showing Proposed Section at Roadway)

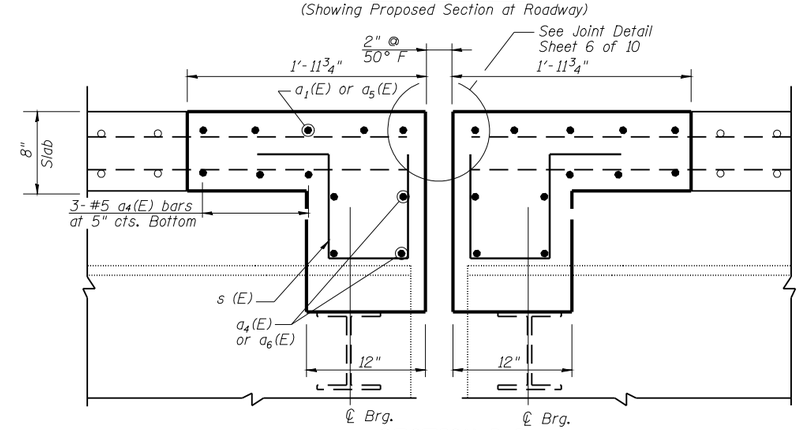

SECTION I-I
(Showing Proposed Section at Median)

Note:
See Sheet 5 of 10 for Sections D-D, E-E and F-F

DECK REPAIRS AT PIER
STRUCTURE NO. 059-0039
(Sheet 2 of 3)

SHEET NO. 4	F.A.S. RTE.	SECTION	COUNTY	TOTAL SHEETS	SHEET NO.
10 SHEETS	728	(59,68) RS-3, BR	Macoupin	137	100
			CONTRACT NO. 72921		
	FED. ROAD DIST. NO. 6	ILLINOIS	FED. AID PROJECT		