STATE OF ILLINOIS
DEPARTMENT OF TRANSPORTATION

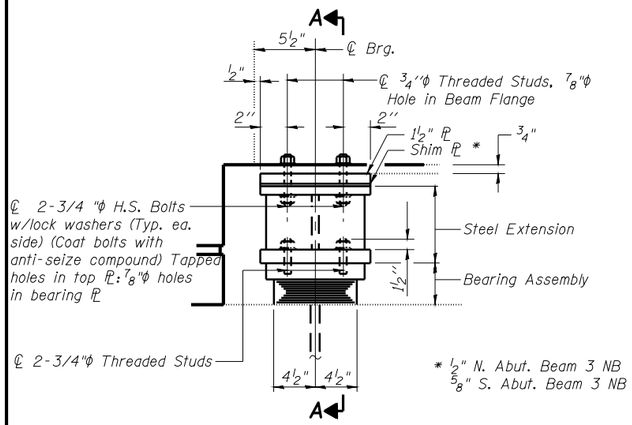

ELEVATION AT ABUT.

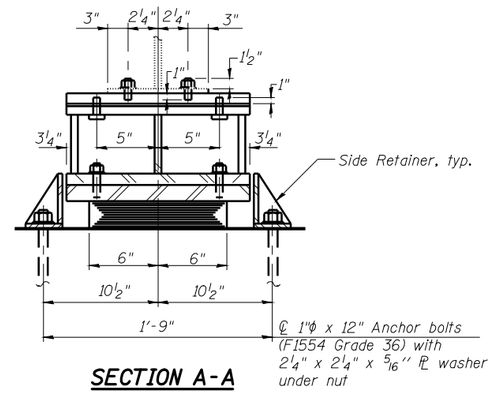

SECTION A-A

TYPE I ELASTOMERIC EXP. BRG.

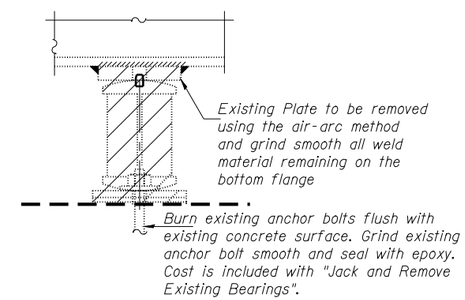

EXISTING BEARING REMOVAL DETAIL

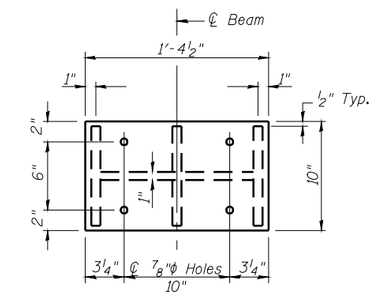

PLAN STEEL EXTENSION

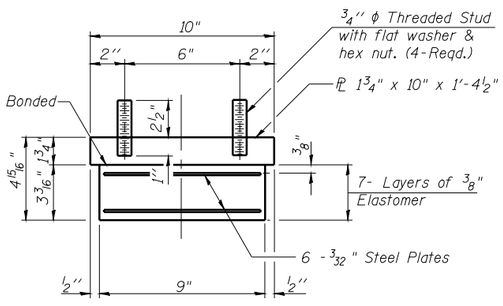

BEARING ASSEMBLY

Note:
Shim plates shall not be placed under Bearing Assembly.

Notes:
Anchor bolts shall be ASTM F1554 all-thread (or an Engineer-approved alternate material) of the grade(s) and diameter(s) specified. ASTM A307 Grade C anchor bolts may be used in lieu of ASTM F1554 Grade 36 (Fy=36ksi). The corresponding specified grade of AASHTO M314 anchor bolts may be used in lieu of ASTM F1554.

Drilled and set anchor bolts shall be installed according to Article 521.06 of the Standard Specifications.

Side retainers and other steel members required for the bearing assembly shall be included in the cost of Elastomeric Bearing Assembly, Type I.

Steel Extensions, Shims and Bolts shall be included in the cost of Furnishing and Erecting Structural Steel.

Two 1/8" adjusting shims shall be provided for each bearing in addition to all other plates or shims and placed as shown on bearing details.

Fasteners shall be AASHTO M164 Type 1, mechanically galvanized bolts. Bolts 3/4"φ in 13/16"φ holes, unless otherwise noted.

Painting of steel shall be according to Article 506.05 of the Standard Specifications.

Prior to ordering any material for shims or extensions, the contractor shall verify in the field all bearing height and shim thickness dimensions.

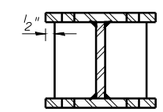

SECTION B-B

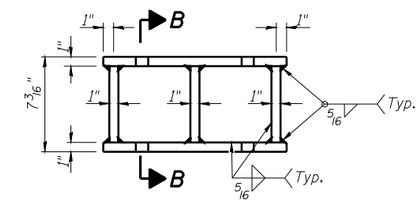

ELEVATION STEEL EXTENSION

BILL OF MATERIAL

Item	Unit	Total
Elastomeric Bearing Assembly Type I	Each	24
Anchor Bolts, 1"	Each	48
Jack & Remove Exist. Bearings	Each	24
Furnishing & Erecting Structural Steel	Pound	5,784

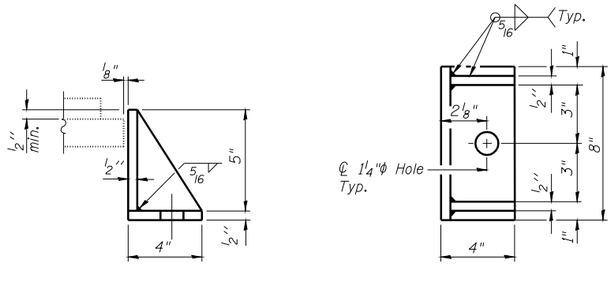

SIDE RETAINER

Equivalent rolled angle with stiffeners will be allowed in lieu of welded plates.

BEAM REACTIONS
(for SN 059-0040)

RD (k)	45.3
RL (k)	35.4
Imp. (k)	11.6
R (Total)(k)	92.3

Min. jack capacity = 4 Tons **

BEAM REACTIONS
(for SN 059-0041)

RD (k)	40.2
RL (k)	33.5
Imp. (k)	11.1
R (Total)(k)	84.8

Min. jack capacity = 4 Tons **

**Capacity with concrete deck removed.
50 tons with existing deck not removed.

ABUTMENT BEARING DETAILS
STRUCTURE NO. 059-0040 (S.B.)
STRUCTURE NO. 059-0041 (N.B.)

SHEET NO. 22	F.A.I. RTE.	SECTION	COUNTY	TOTAL SHEETS	SHEET NO.
31 SHEETS	55	(59, 68)RS-3, BR	Macoupin	137	119
			CONTRACT NO. 72921		
	FED. ROAD DIST. NO. 6	ILLINOIS	FED. AID PROJECT		