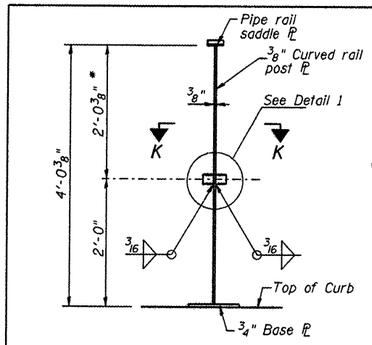

BICYCLE RAIL INTERMEDIATE POST ELEVATION

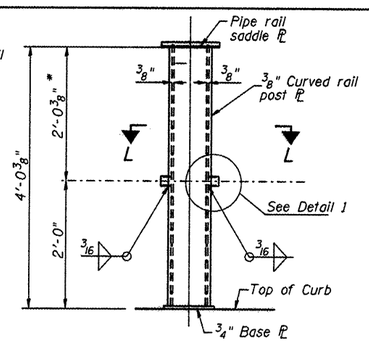

BICYCLE RAIL ANCHOR POST ELEVATION

*Dimension at front edge of rail post to bottom of saddle PL. See sheet 25 of 79 for details.

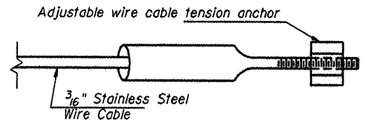

DETAIL 2
WIRE CABLE ANCHOR SYSTEM

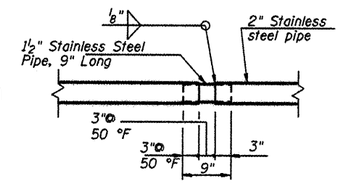

STAINLESS STEEL PIPE EXPANSION JOINT

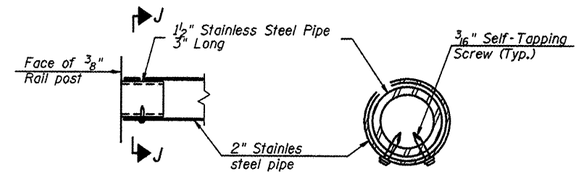

DETAIL 1
STAINLESS STEEL PIPE SUPPORT

SECTION J-J

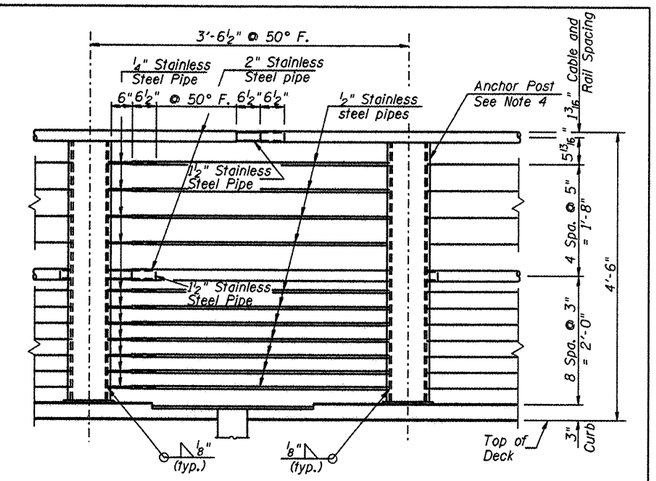

PEDESTRIAN RAILING ELEVATION AT FINGERPLATE JOINT

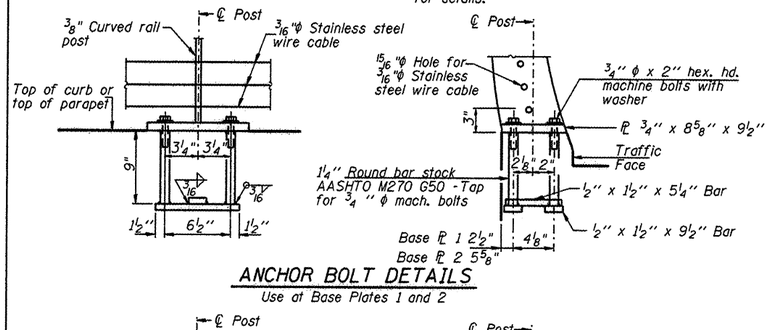

ANCHOR BOLT DETAILS
Use at Base Plates 1 and 2

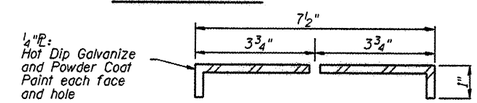

DETAIL 2

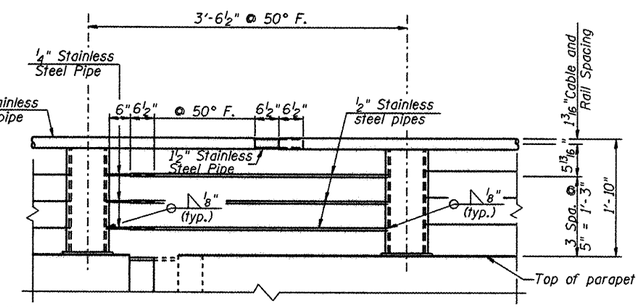

PARAPET RAILING ELEVATION AT FINGERPLATE JOINT

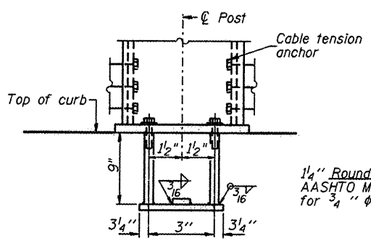

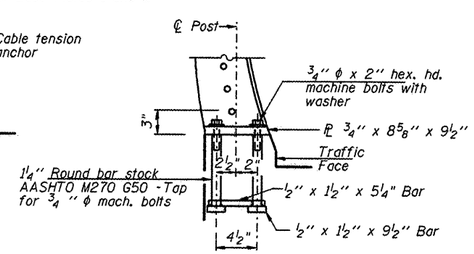

ANCHOR BOLT DETAILS
Use at Base Plate 3

In lieu of the cast-in-place anchor device shown, the Contractor has the option of drilling and setting 3/4" φ anchor rods according to Article 509.06 of the Standard Specifications. Embedment shall be according to the manufacturer's specifications.

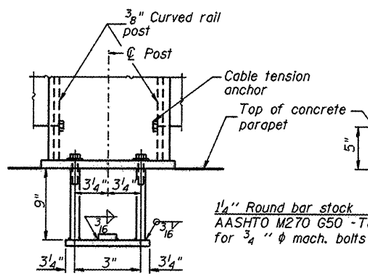

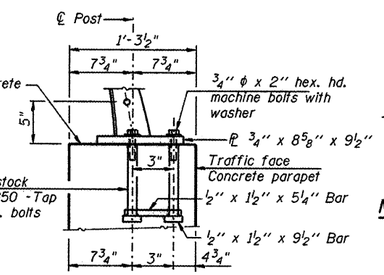

ANCHOR BOLT DETAILS
Use at Base Plate 4

NOTES:

1. Coating for the Rail Post Steel shall be Light Gray powder coat.
2. For cable tension anchors, see special provisions.
3. Work this sheet with sheet 25 of 79.
4. Curved Plates in Anchor Posts immediately adjacent to the finger plate expansion joint shall be solid plate stock in order to accommodate steel rods and pipes welded to the face of the plate.
5. Offset holes for stainless steel wire cable in anchor posts, by no more than 3/8" in any direction to allow for proper tightening of wire rope anchor system.

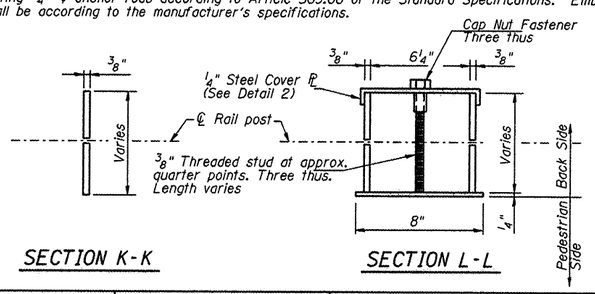

SECTION K-K

SECTION L-L

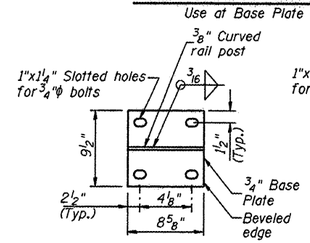

VIEW B-B
BASE PLATE 1

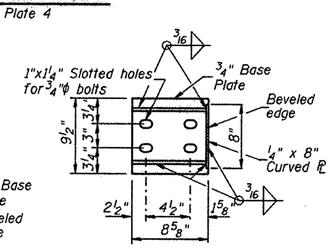

VIEW F-F
BASE PLATE 3

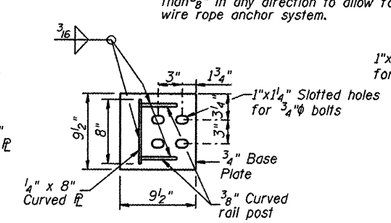

VIEW G-G
BASE PLATE 4

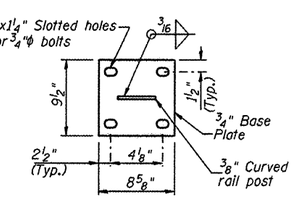

VIEW C-C
BASE PLATE 2

CMT Copyright CMT, Inc. CRAWFORD, MURPHY & TILLY, INC. CONSULTING ENGINEERS License No. 184-000613	HNTB	DESIGNED - PA, JDJ, BPD, CJW	REVISED -
		DRAWN - GLD	REVISED -
		CHECKED - RJK	REVISED -
		DATE - 02/04/2011	REVISED -

CITY OF ROCKFORD
MORGAN STREET BRIDGE

RAILING DETAILS – II
STRUCTURE NO. 101-6108

SCALE: | SHEET NO. 23A OF 79 SHEETS | STA. 47+00.74 TO STA. 52+63.50

F.A.U. RTE.	SECTION	COUNTY	TOTAL SHEETS	SHEET NO.
5077	99-00493-00-BR	WINNEBAGO	253	149A
		CONTRACT NO. 85529		

FED. ROAD DIST. NO. 2 | ILLINOIS | FED. AID PROJECT BRM-5099(65)

v:\Bauer-1-roof-for-fl\8025882\dgn\add_sheets\S_254_Railing Detail.dgn

149a