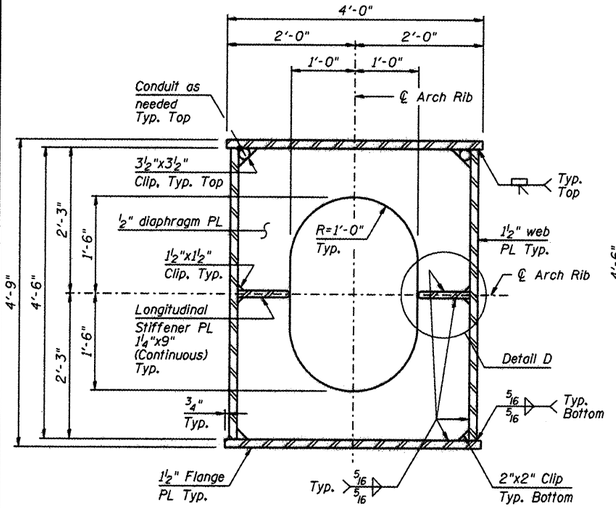

SECTION A-A

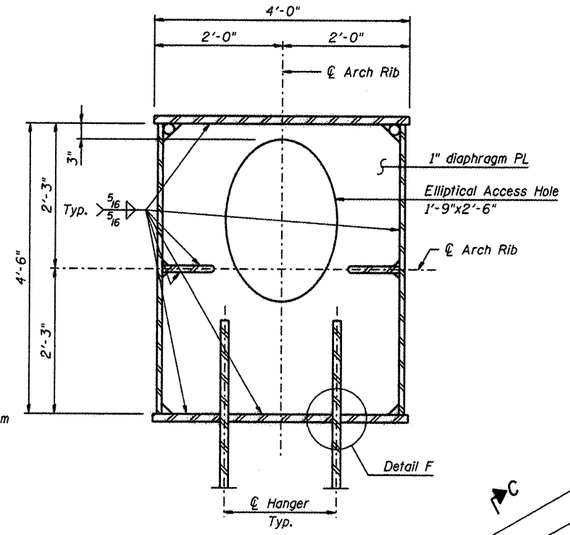

SECTION B-B

(Hanger Plate Angles not shown for clarity.)
(See section C-C for Additional Information)

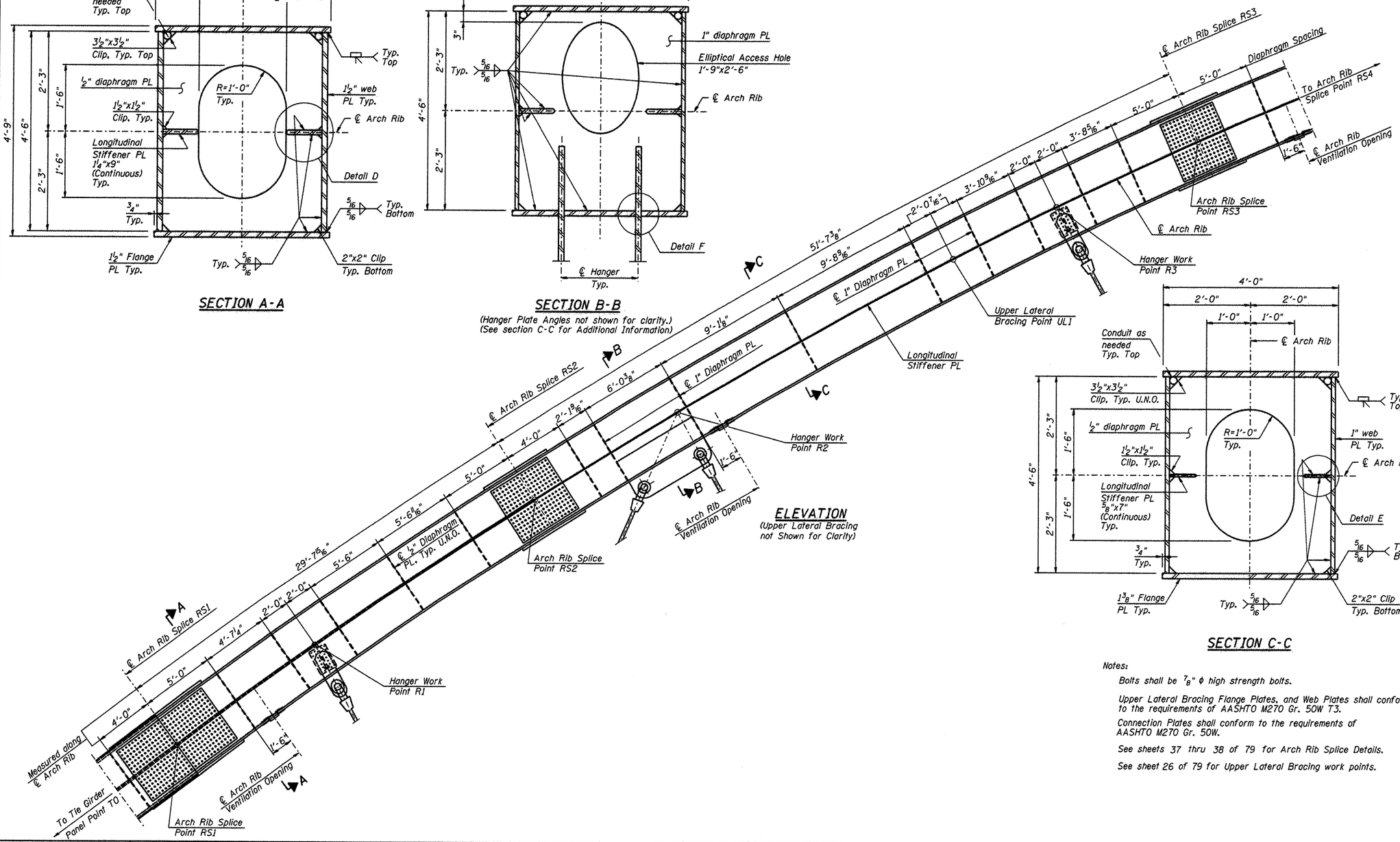

ELEVATION

(Upper Lateral Bracing not Shown for Clarity)

SECTION C-C

Notes:

Bolts shall be ⅞" ϕ high strength bolts.

Upper Lateral Bracing Flange Plates, and Web Plates shall conform to the requirements of AASHTO M270 Gr. 50W T3.

Connection Plates shall conform to the requirements of AASHTO M270 Gr. 50W.

See sheets 37 thru 38 of 79 for Arch Rib Splice Details.

See sheet 26 of 79 for Upper Lateral Bracing work points.

L:\ROCKFORD\0826882\Draw\CADD_Sheets\S_34_Rib RS1 to RS3.dgn

CMT ©Copyright CMT, Inc. CRAWFORD, MURPHY & TILLY, INC. CONSULTING ENGINEERS License No. 184-000613	HNTB	DESIGNED - PA, JDJ, BPD, CJW	REVISED -	CITY OF ROCKFORD MORGAN STREET BRIDGE	ARCH RIB RS1 TO RS3 AND RS10 TO RS8 STRUCTURE 101-6108	F.A.U. RTE. 5077	SECTION 99-00493-00-BR	COUNTY WINNEBAGO	TOTAL SHEETS 253 / SHEET NO. 160
		DRAWN - GLD	REVISED -					CONTRACT NO. 85529	
		CHECKED - RJK	REVISED -						
		DATE - 02/04/2011	REVISED -		SCALE: / SHEET NO. 34 OF 79 SHEETS / STA. 47+00.74 TO STA. 52+63.50	FED. ROAD DIST. NO. 2	ILLINOIS	FED. AID PROJECT BRM-5099(65)	