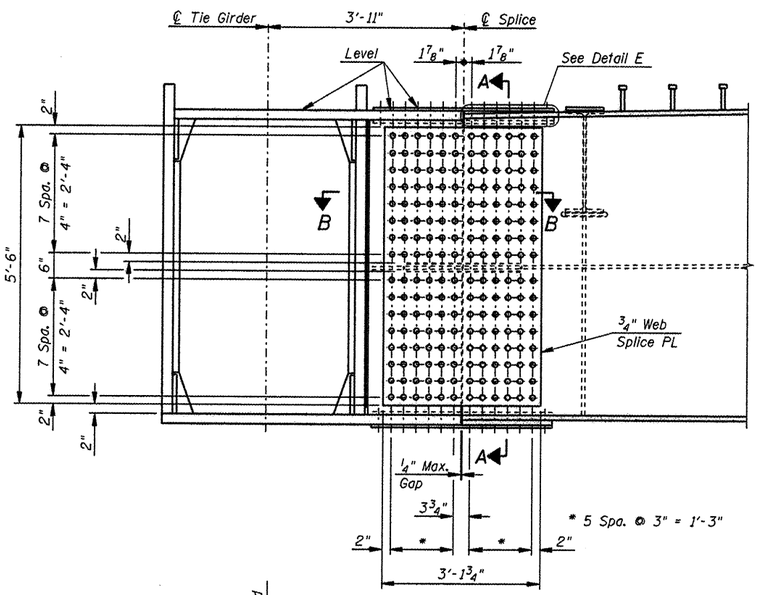

END FLOORBEAM - WEB SPLICE

FB0 Shown, FB11 similar

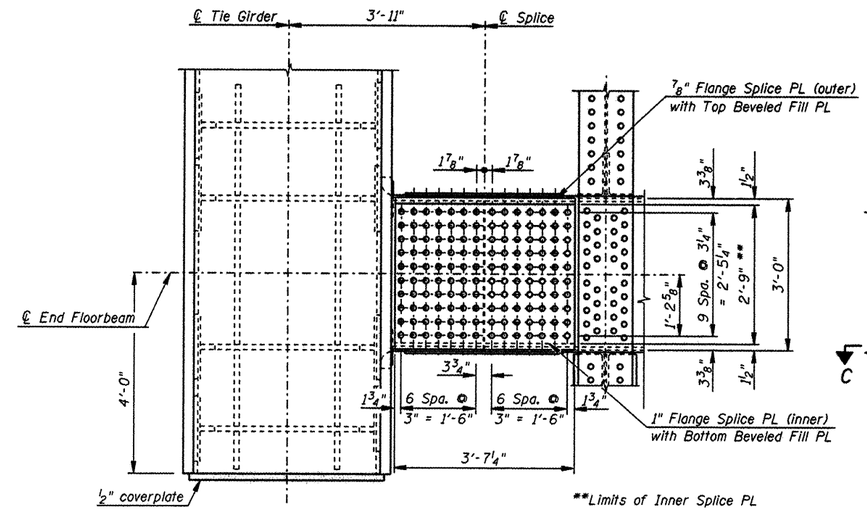

END FLOORBEAM TOP AND BOTTOM FLANGE SPLICE

Top Flange Splice Shown, Bottom Flange Splice Similar.
(Stiffener Plates not shown for clarity.)

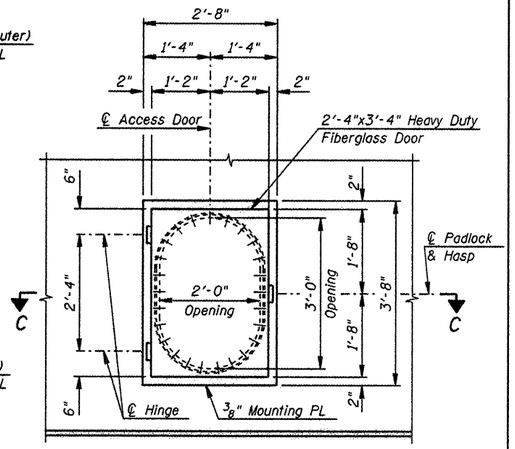

ACCESS DOOR DETAIL

Notes:
Install Fiberglass door per manufacturer's recommendations. Door shall be heavy duty and water tight. Fiberglass door shall be approved by the engineer.

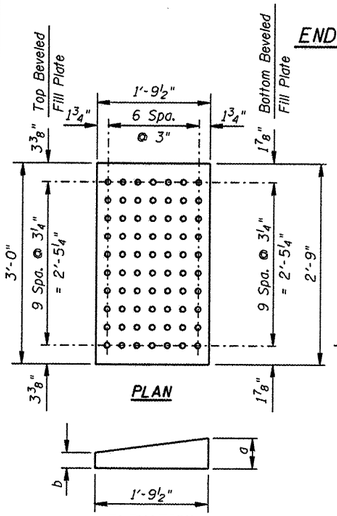

PLAN

ELEVATION

Bottom Beveled Fill Plate shown,
Top Beveled Fill Plate similar

Top & Bottom Beveled Fill Plate	a	b
South	9/16"	3/16"
North	5/8"	1/8"

END FLOORBEAM TOP FLANGE SPLICE BEVELED FILL PLATES

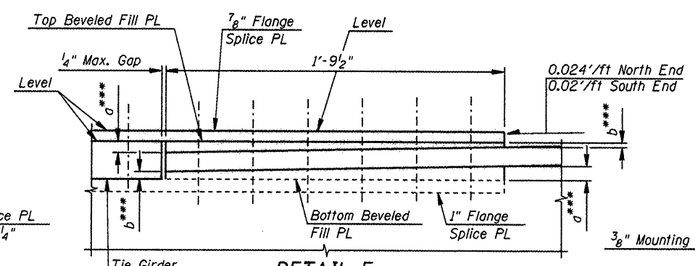

DETAIL E

*** For a and b dimensions, see Beveled Fill Plate details.

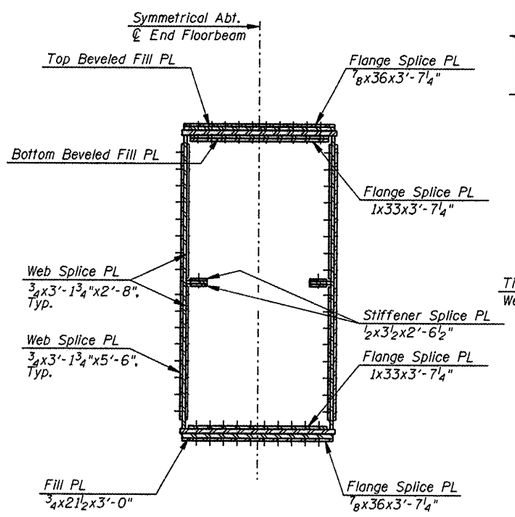

SECTION A-A

Tie Girder not shown for clarity.

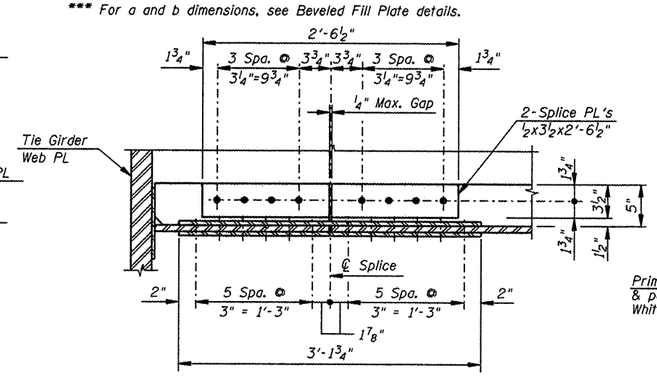

SECTION B-B

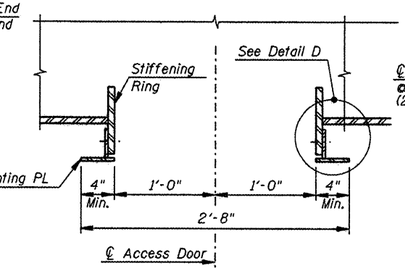

SECTION C-C

Fiberglass Door not shown for clarity

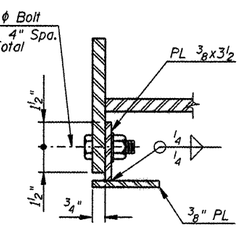

DETAIL D

Notes:
- Denotes 7/8" ϕ high-strength bolt.
- o Denotes 1" ϕ high-strength bolt.

For Stringer Details, see Sheets 60 and 61 of 79.
End Floorbeam flange and web plates, filler plates, stiffener plates, bent plates and splice plates shall conform to the requirements of M270 Grade 50W T3.
For End Floorbeam Elevation and Section Details, see Sheets 54 and 55 of 79.
For Tied Arch End Details, see Sheets 31 thru 33 of 79.

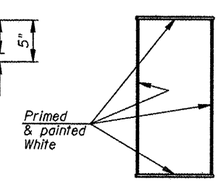

END FLOORBEAM INTERIOR PAINT DETAIL

L:\ROCKFORD\B826982\Drawings\CADD.Sheets\S.55.End Floorbeam Details.dgn

CMT ©Copyright CMT, Inc.
CRAWFORD, MURPHY & TILLY, INC.
CONSULTING ENGINEERS
License No. 184-000613

HNTB

DESIGNED - PA, JDJ, BPD, CJW	REVISED -		
DRAWN - GLD	REVISED -		
CHECKED - RJK	REVISED -		
DATE - 02/04/2011	REVISED -		

CITY OF ROCKFORD
MORGAN STREET BRIDGE

END FLOORBEAM DETAILS
STRUCTURE NO. 101-6108

SCALE: | SHEET NO. 55 OF 79 SHEETS | STA. 47+00.74 TO STA. 52+63.50

F.A.U. RTE.	SECTION	COUNTY	TOTAL SHEETS	SHEET NO.
5077	99-00493-00-BR	WINNEBAGO	253	181

CONTRACT NO. 85529

FED. ROAD DIST. NO. 2 | ILLINOIS | FED. AID PROJECT BRM-5099(65)