CONCRETE COLLARS FOR PIPE OR BOX CULVERT EXTENSIONS

Bill of Materials

	DIMENSIONS		h Bar	U Bar		EXPANSION BOLTS	CONCRETE COLLAR	REINF. BARS
STATION	X	Y	No.	No.	Length	No.	Cu. Yd	LBS
					Total			

All h Bars 450 (18) Long

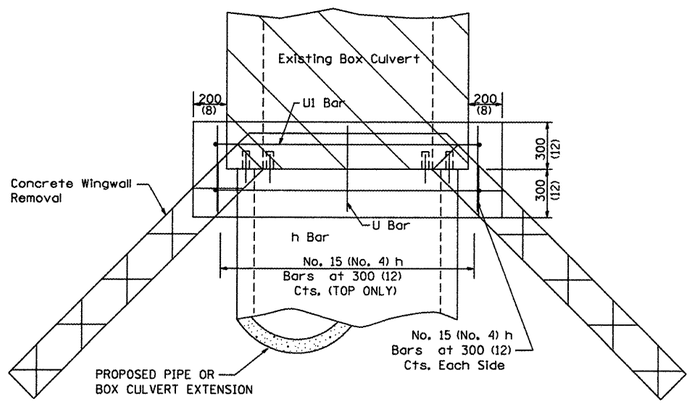

PLAN OF CULVERT WITH ANGLED WING WALLS

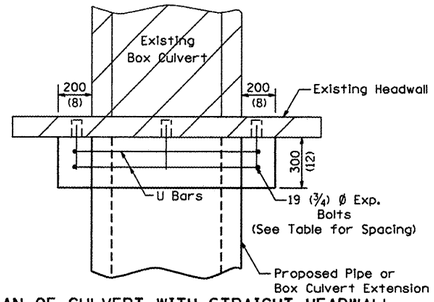

PLAN OF CULVERT WITH STRAIGHT HEADWALL

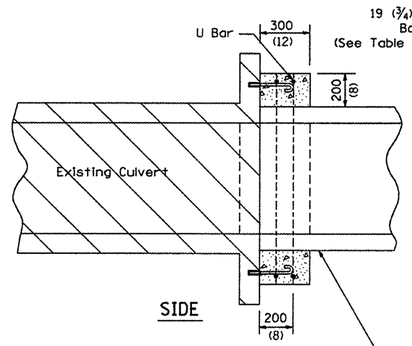

SIDE

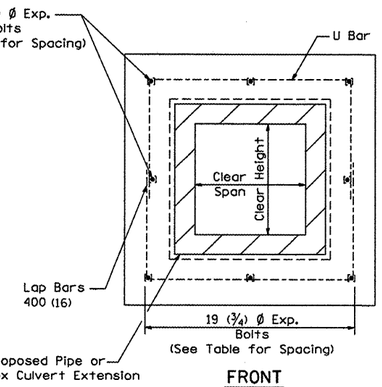

FRONT

General Notes

Concrete Collars shall be constructed of Class SI Concrete in accordance with Section 503 of the Standard Specifications

Reinforcement bars shall conform to Section 508 of the Standard Specifications.

The concrete will be paid for at the contract unit price per cubic meter (cubic yard) for CONCRETE COLLAR. Reinforcement will be paid for at the contract unit price per kilogram (pound) for REINFORCEMENT BARS. Expansion Bolts, when required, will be paid for at the contract unit price each for EXPANSION BOLTS of the size indicated, which price shall include furnishing, drilling holes, and installing the expansion bolts complete in place. These bolts shall extend at least 200 (8 inches) into the new concrete.

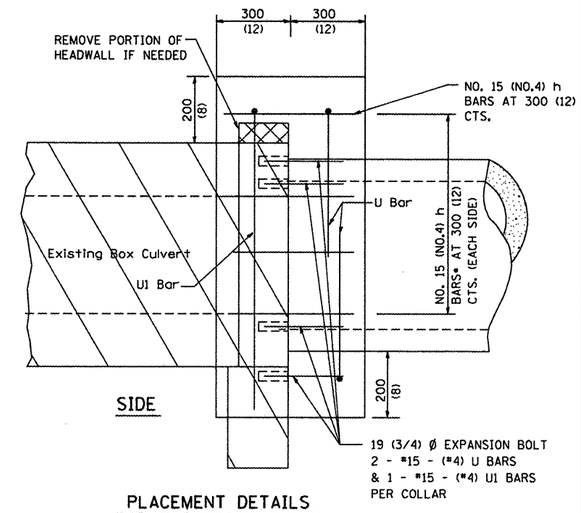

SIDE

PLACEMENT DETAILS FOR EXPANSION BOLTS

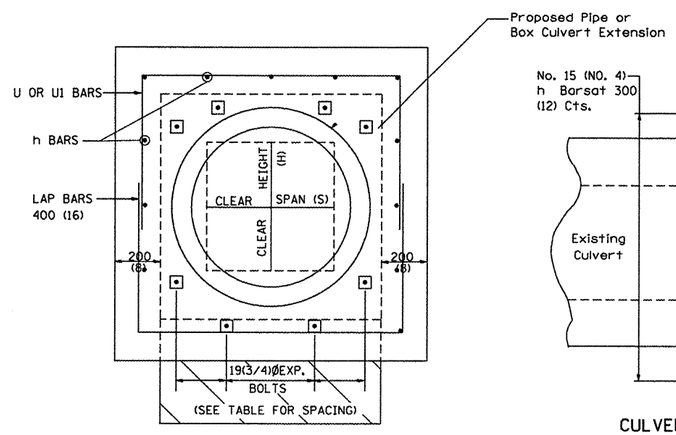

FRONT

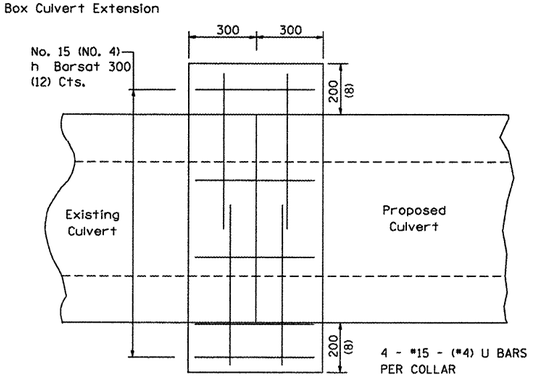

CULVERT CONNECTION WITHOUT EXISTING HEADWALL

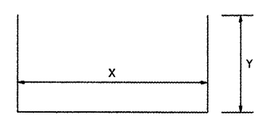

(#4) U BAR

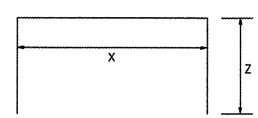

(#4) U1 BAR

H OR S	NUMBER OF EXPANSION BOLTS REQUIRED PER SIDE			
	EXTENSIONS < 4.57m (15')		EXTENSIONS > 4.57m (15')	
	NUMBER	SPACING	NUMBER	SPACING
600 (24)	*		*	
750 (30)	2	450 (18)	2	450 (18)
900 (36)	2	600 (24)	2	600 (24)
1200 (48)	3	450 (18)	3	450 (18)
1500 (60)	4	400 (16)	3	600 (24)
1800 (72)	5	375 (15)	4	500 (20)
2100 (84)	5	450 (18)	4	600 (24)
2400 (96)	6	375 (15)	5	525 (21)
2700 (108)	6	475 (19)	5	600 (24)
3000 (120)	7	450 (18)	6	525 (21)
3300 (132)	8	425 (17)	6	600 (24)
3600 (144)	8	475 (19)	7	550 (22)

* MINIMUM ONE PER SIDE

CONCRETE COLLARS FOR PIPE OR BOX CULVERT EXTENSIONS 33.1

©Copyright CMT, Inc.

CMT CRAWFORD, MURPHY & TILLY, INC. CONSULTING ENGINEERS License No. 184-000613

USER NAME = Steve Prange	DESIGNED - SJP / MNB	REVISED - 11-09-06	
	DRAWN - ERD	REVISED -	
PLOT SCALE = 40.0000 ' / IN.	CHECKED - SJP	REVISED -	
PLOT DATE = 02/04/11	DATE - 02/04/2011	REVISED -	

CITY OF ROCKFORD
MORGAN STREET BRIDGE

IDOT D2 /CITY STANDARD DRAWINGS - 8

SCALE: N/A | SHEET NO. 8 OF 15 SHEETS | STA. TO STA.

F.A. RTE.	SECTION	COUNTY	TOTAL SHEETS	SHEET NO.
5077	99-00493-00-BR	WINNEBAGO	253	246

CONTRACT NO. 85529

FED. ROAD DIST. NO. 2 | ILLINOIS | FED. AID PROJECT BRM-5099(65)

I:\rockford\08260802\dgn\cadd_sheets\R_STD_DRAWINGS_8.dgn