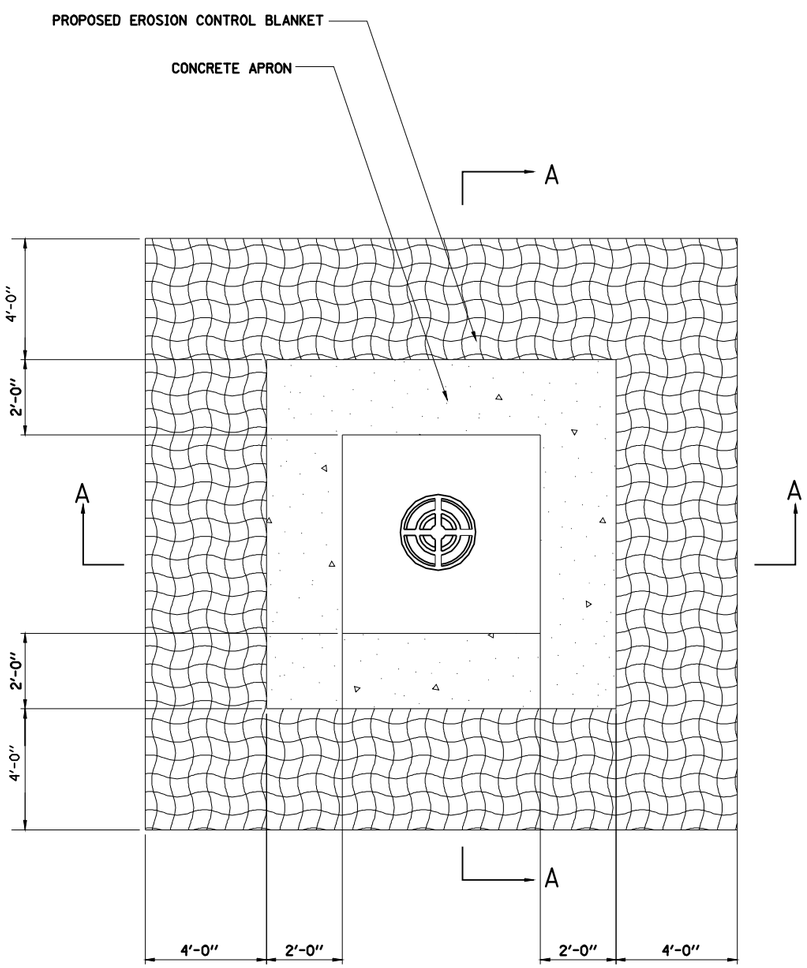

PLAN VIEW

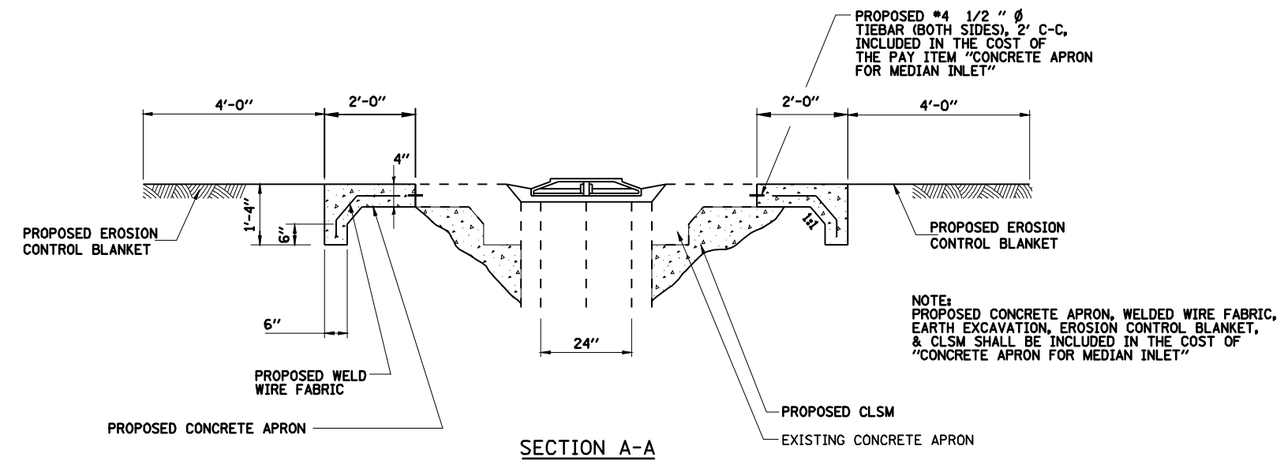

NOTE:
PROPOSED CONCRETE APRON, WELDED WIRE FABRIC, EARTH EXCAVATION, EROSION CONTROL BLANKET, & CLSM SHALL BE INCLUDED IN THE COST OF "CONCRETE APRON FOR MEDIAN INLET"

SECTION A-A

CONCRETE APRON FOR MEDIAN INLET (604101)

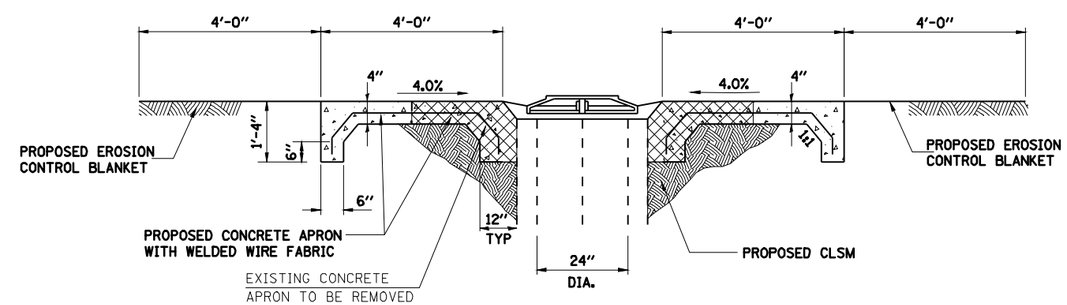

SECTION A-A

MEDIAN INLET (604101) TO BE RECONSTRUCTED

NOTE:
REMOVAL AND DISPOSAL OF THE EXISTING CONCRETE APRON, PROPOSED CONCRETE APRON, WELDED WIRE FABRIC, EARTH EXCAVATION, EROSION CONTROL BLANKET, FRAME & GRATE ADJUSTMENT, & CLSM SHALL BE INCLUDED IN THE COST OF "MEDIAN INLET (604101) TO BE RECONSTRUCTED"

FILE NAME = c:\pw_work\PWIDOT\LAUGHLINRL\d0182983\093-sht-Details.dgn	USER NAME = laughlinrl	DESIGNED -	REVISED -
		DRAWN -	REVISED -
	PLOT SCALE = 100.0000 ' / IN.	CHECKED -	REVISED -
	PLOT DATE = Feb-01-2010 10:55:02AM	DATE -	REVISED -

STATE OF ILLINOIS
DEPARTMENT OF TRANSPORTATION

CONCRETE APRON FOR MEDIAN INLET (604101) DETAIL
MEDIAN INLET (604101) TO BE RECONSTRUCTED DETAIL

SCALE: none | SHEET NO. 5 OF 9 SHEETS | STA. TO STA.

F.A.I RTE.	SECTION	COUNTY	TOTAL SHEETS	SHEET NO.
172	1-(1,2,3,4,5)RS	ADAMS	165	97
		CONTRACT NO. 72A09		
FED. ROAD DIST. NO.	ILLINOIS	FED. AID PROJECT		