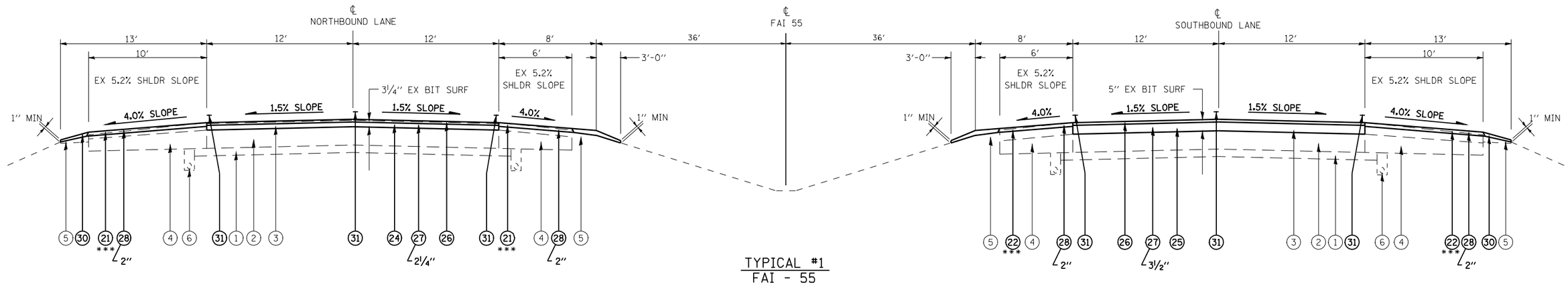

TYPICAL #1
FAI - 55

STA 698+00.00 TO STA 744+52.54
STA 766+33.65 TO STA 788+61.68
STA EQ 809+87.27 BK = STA 161+08.45 AH
STA 161+08.45 TO STA 250+00.00

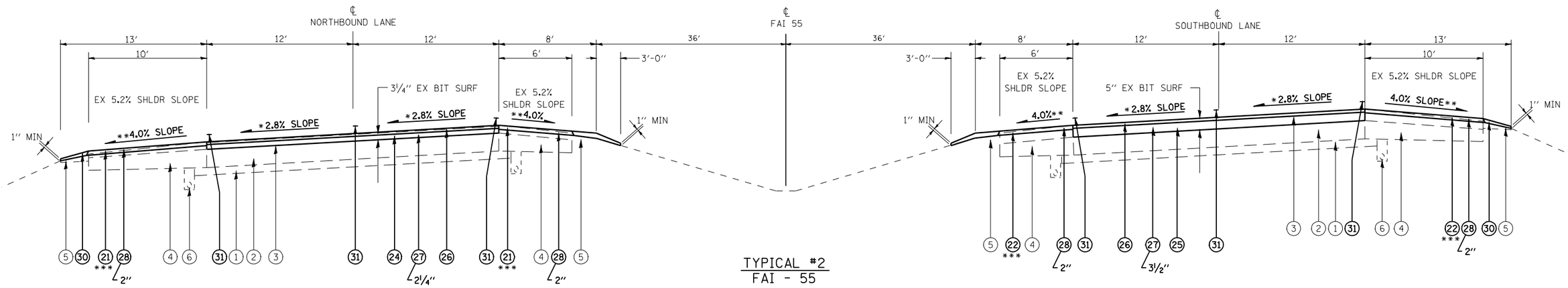

TYPICAL #2
FAI - 55

STA 744+52.54 TO STA 766+33.65
STA 788+61.98 TO STA 809+87.26
STA EQ 809+87.27 BK = STA 161+08.45 AH

* MATCH EXISTING CROSS SLOPES AT TRANSITIONS AND SUPER ELEVATED SECTIONS

** WHEN THE SUPERELEVATION RATE OF PAVEMENT IS BETWEEN 0.0% AND 4.0%, THE SHOULDER SLOPE SHALL BE SLOPED AT 4.0%. WHEN THE SUPER ELEVATION RATE OF PAVEMENT EXCEEDS 4.0%, THE SHOULDER SHALL BE SLOPED SO THAT THE ALGEBRAIC DIFFERENCE BETWEEN THE PAVEMENT AND SHOULDER IS 8.0% FOR THE HIGH SIDE OF THE SE, AND MATCH THE SE FOR THE LOW SIDE OF THE SE.

*** HMA SURFACE REMOVAL SHALL BE THE DEPTH SPECIFIED AT THE EOP, AND MAY VARY DUE TO EXISTING SHOULDER SLOPE

NOTE:

SEE " EMERGENCY MEDIAN CROSS OVER DETAIL" SHEET FOR DETAILS OF THE WIDENING OF THE HMA SHOULDERS

EXISTING LEGEND

1. EX STABILIZED SUB-BASE 4″
2. EX CRPCC PAVEMENT 9″
3. EX HOT-MIX ASPHALT SURFACE COURSE (THICKNESS VARIES)
4. EX HMA SHOULDERS (THICKNESS VARIES)
5. EX AGGREGATE SHOULDERS
6. EX PIPE UNDERDRAINS 6″
7. EX PCC PAVEMENT 8″
8. EX COMBINATION CONCRETE CURB & GUTTER M-6.06
9. EX PCC MEDIAN SURFACE 4″

PROPOSED LEGEND

20. PR HOT-MIX ASPHALT SURFACE REMOVAL, ¾″
21. PR HOT-MIX ASPHALT SURFACE REMOVAL, 1½″
22. PR HOT-MIX ASPHALT SURFACE REMOVAL, 2 ″
23. PR HOT-MIX ASPHALT SURFACE REMOVAL, 2½″
24. PR HOT-MIX ASPHALT SURFACE REMOVAL, 3¼″
25. PR HOT-MIX ASPHALT SURFACE REMOVAL, 5″
26. PR POLYMERIZED HMA SURFACE COURSE, MIX "E", N105 1½″
27. PR POLYMERIZED HMA BINDER COURSE, IL-19.0, N105
28. PR POLYMERIZED HMA SURFACE COURSE, MIX "C", N50
29. PR HMA SHOULDER 8″
30. PR AGGREGATE SHOULDERS, TYPE B (WEDGE)
31. PR PAVEMENT MARKING

FILE NAME = c:\pw_work\PWIDOT\COXTE\dms25312\D672A60-Typicals.dgn	USER NAME = coxte	DESIGNED -	REVISED -
		DRAWN -	REVISED -
	PLOT SCALE = 100.0000 ' / IN.	CHECKED -	REVISED -
	PLOT DATE = Mar-23-2010 03:21:08PM	DATE -	REVISED -

STATE OF ILLINOIS
DEPARTMENT OF TRANSPORTATION

TYPICAL SECTIONS
MAINLINE I-55

SCALE: NONE | SHEET NO. OF SHEETS | STA. TO STA.

F.A.I. RTE.	SECTION	COUNTY	TOTAL SHEETS	SHEET NO.
55	59RS-2, BR	MACOUPIN	100	11

CONTRACT NO. 72A60

ILLINOIS FED. AID PROJECT