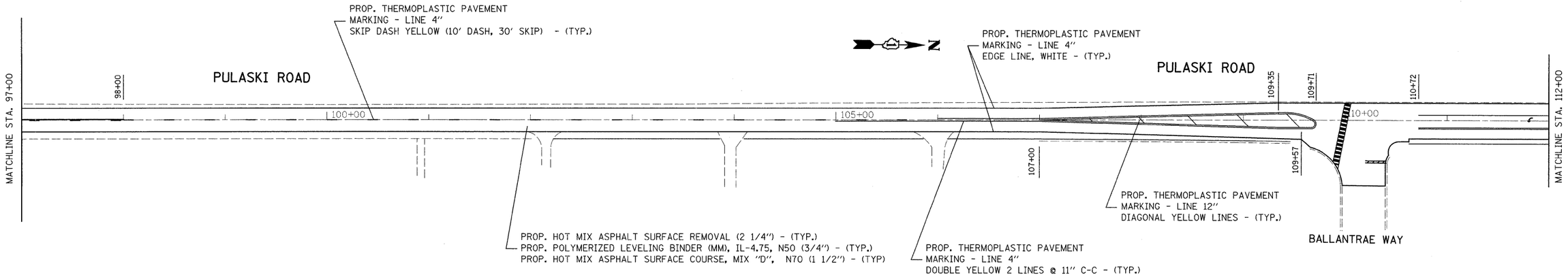

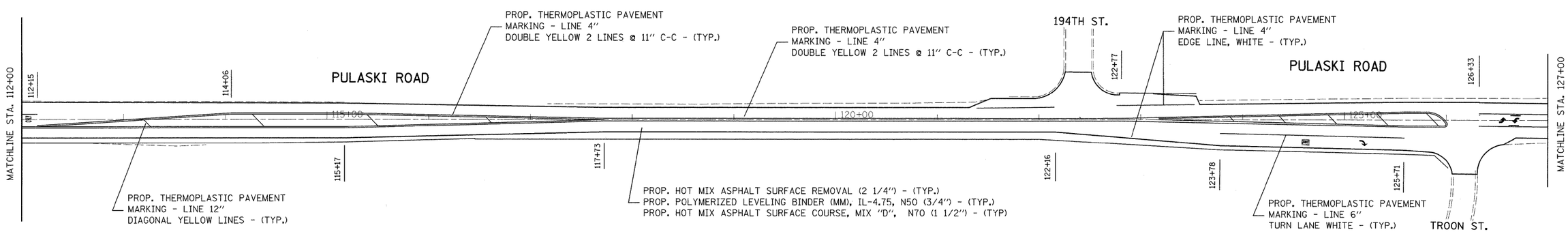

NOTES:
LIMIT OF RESURFACING ON SIDE-STREETS THROUGH OUT THE IMPROVEMENT SHALL BE TO THE RADIUS OF RETURN OR AS DIRECTED BY THE ENGINEER.

ALL FINAL PAVEMENT MARKINGS SHALL BE THERMOPLASTIC (OF THE EXTRUDED TYPE) AND SHOULD BE PLACED IN ACCORDANCE WITH "DISTRICT ONE TYPICAL PAVEMENT MARKINGS" DETAIL, (TC-13).

ALL RAISED REFLECTIVE PAVEMENT MARKINGS SHALL BE PLACED IN ACCORDANCE WITH THE DISTRICT ONE "TYPICAL APPLICATIONS RAISED REFLECTIVE PAVEMENT MARKER DETAIL." (TC-11).

FILE NAME = c:\pw_work\pwidot\banksl\dms89328\sh_rdy.dgn	USER NAME = banksl	DESIGNED -	REVISED -	STATE OF ILLINOIS DEPARTMENT OF TRANSPORTATION	CRAWFORD AVE. FROM I-80 TO U.S. 30			F.A.U RTE.	SECTION	COUNTY	TOTAL SHEETS / SHEET NO.
		DRAWN -	REVISED -					3778	(3143 & 3144) RS-1	COOK	29 / 10
	PLOT SCALE = 50.0000 ' / IN.	CHECKED -	REVISED -							CONTRACT NO. 60F44	
	PLOT DATE = 3/25/2009	DATE -	REVISED -		SCALE:	SHEET NO. OF SHEETS	STA. 97+00 TO STA. 127+00	FED. ROAD DIST. NO.	ILLINOIS	FED. AID PROJECT	