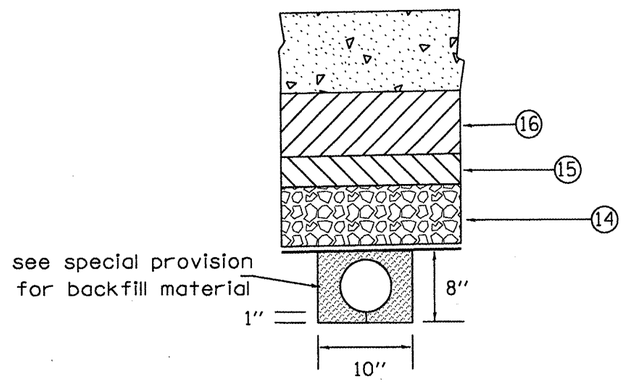

Underdrain Installation
Detail

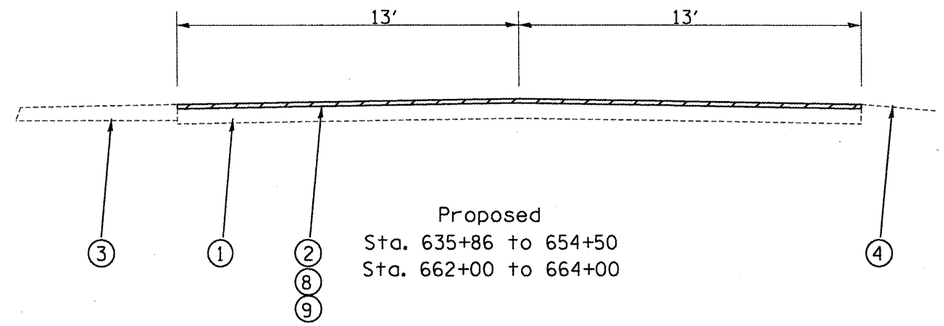

Proposed
Sta. 635+86 to 654+50
Sta. 662+00 to 664+00

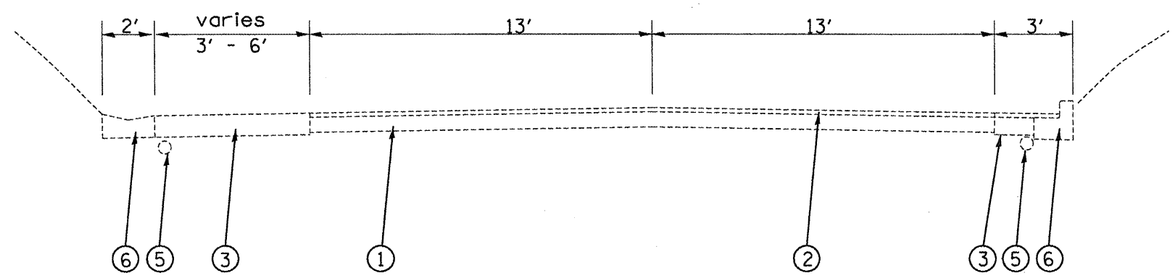

Existing to be removed
Sta. 654+50 to 662+00

* 25 foot gutter transition from Type B Modified to Type B6.24 under structure

1. Existing PCC Pavement 7"
2. Existing HMA Overlay
3. Existing HMA Shoulder
4. Existing Aggregate Shoulder
5. Existing Pipe Underdrain
6. Existing B Curb & Gutter
7. Existing B Curb
8. Proposed HMA Surface Removal 1 1/2"
9. Proposed HMA Overlay 1 1/2"
10. Proposed PCC Pavement 10"
11. Proposed PCC Shoulder 10"
12. Proposed Type B Modified Gutter
13. Proposed 6" Pipe Underdrain
14. Proposed Rockfill, 18"
15. Proposed Porous Granular Embankment, CA7 or CA11 Crushed, 6"
16. Proposed Subbase Granular Material Type A, 12"
17. Proposed Geotechnical Fabric for Ground Stabilization

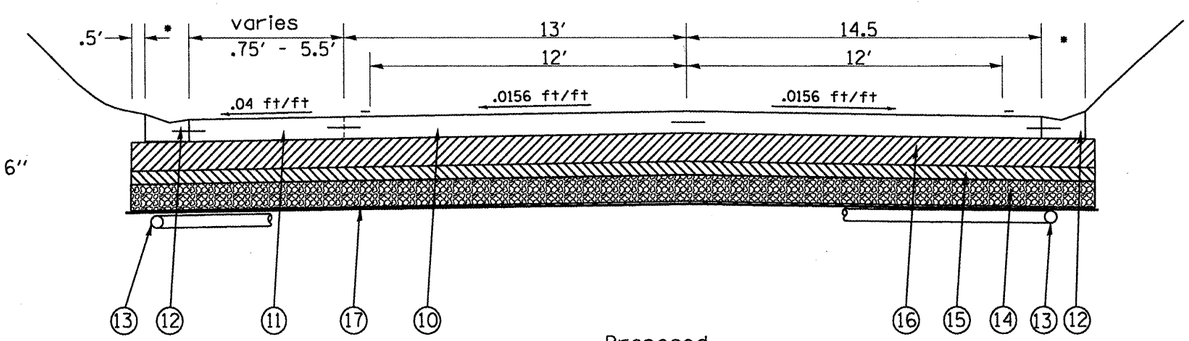

Proposed
Sta. 654+50 to 662+00

FILE NAME = 0468890-Design.dgn	USER NAME = eversol	DESIGNED - ___	REVISED - ___	STATE OF ILLINOIS DEPARTMENT OF TRANSPORTATION	TYPICAL SECTIONS	F.A.P. RTE.	SECTION	COUNTY	TOTAL SHEETS	SHEET NO.
		DRAWN - ___	REVISED - ___			22	*	PEORIA	100	54
	PLOT SCALE = 80.0000 ' / IN.	CHECKED - ___	REVISED - ___			*(108X,130,102)RS-3;129RS-4,101RS-2		CONTRACT NO. 68890		
	PLOT DATE = 4/6/2009	DATE - _____	REVISED - ___		SCALE: _____ SHEET NO. __ OF ___ SHEETS STA. _____ TO STA. _____			ILLINOIS FED. AID PROJECT		