CONTRACT NO. 70025

F.A.I. RTE.	SECTION	COUNTY	TOTAL SHEETS	SHEET NO.
72	*	**	104	83

* 74(10-70)RS-3 & (10-71,73)RS-2
** PIATT & CHAMPAIGN

DETAIL FOR MILLING TRANSITION AT MAINLINE I-57 STRUCTURES

STATION 1958+09.89 TO 1958+99.89 EB & WB
STATION 1962+39.89 TO 1963+29.89 EB & WB

NOTE:
AREA OF MILLING TRANSITION SHALL BE INCLUDED IN CONTRACT UNIT PRICE FOR THE HOT-MIX ASPHALT SURFACE REMOVAL - 2¼". NO ADDITIONAL COMPENSATION SHALL BE ALLOWED.

HOT-MIX ASPHALT SURFACE REMOVAL - 2¼"

MILLING TRANSITION AREA

HOT-MIX ASPHALT SURFACE REMOVAL - 1½"

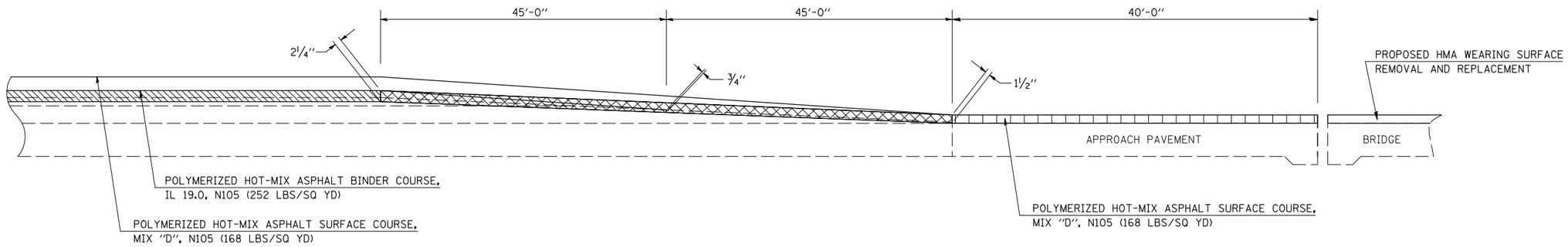

DETAIL FOR HOT-MIX ASPHALT SURFACE REMOVAL-BUTT JOINT SHOULDERS AT I-57 STRUCTURES

LT/RT STATION 1958+09.89 TO 1958+99.89 EB & WB
LT/RT STATION 1962+39.89 TO 1963+29.89 EB & WB

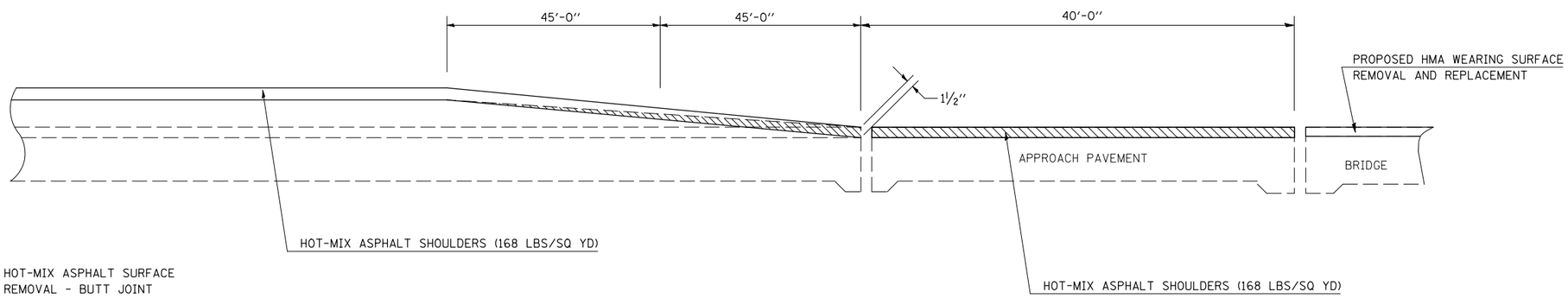

HOT-MIX ASPHALT SURFACE REMOVAL - BUTT JOINT

NOT TO SCALE

ILLINOIS DEPARTMENT OF TRANSPORTATION
DETAIL FOR
HMA SURFACE REMOVAL-BUTT JOINT
AND MILLING TRANSITION
F.A.I. ROUTE 72
SECTION 74(10-70)RS-3&(10-71,73)RS-2
PIATT/CHAMP. CO.
SCALE: NONE
DATE: 03-31-09
DRAWN BY: CADD
CHECKED BY

PLOT DATE 4/13/2009
FILE NAME c:\pw_work\PWIDOT\SHERERJM\d0112995\V00250etails5herer.dgn
PLOT SCALE 42.3529 ' / IN.
USER NAME sherer.pm