CONTRACT NO. 70508

F.A.P. RTE.	SECTION	COUNTY	TOTAL SHEETS	SHEET NO.
709	(104)RS-1	MCLEAN	21	6
STA.		TO STA.		
FED. ROAD DIST. NO.	ILLINOIS	FED. AID PROJECT		

EXISTING TYPICAL CROSS SECTION

STATION 1162+80.00 TO STATION 1450+95.00

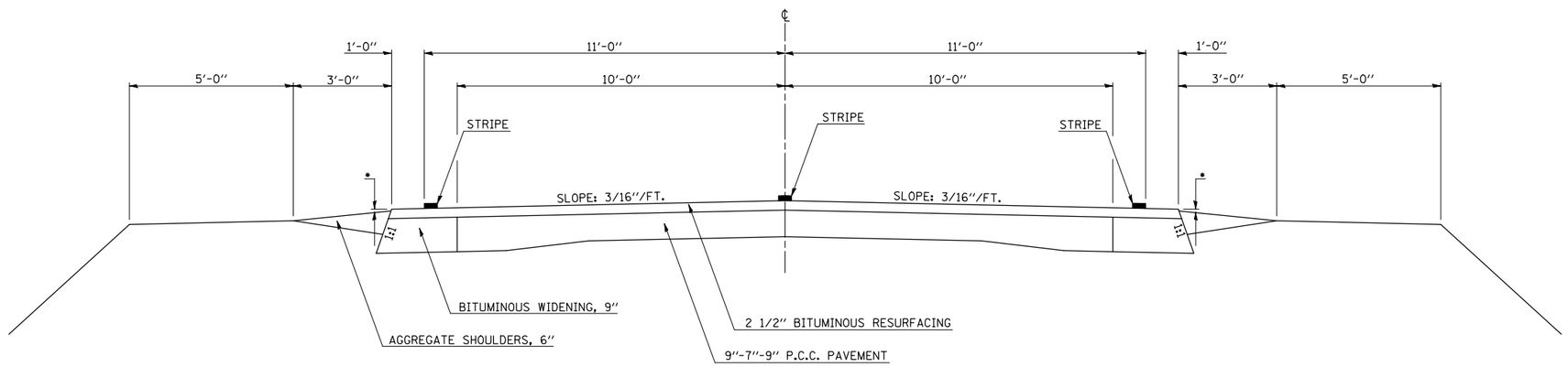

* 1 1/2" RT.; 2 1/2" LT. - VARIOUS AREAS WITH LOW SHOULDERS

PROPOSED TYPICAL CROSS SECTION

STATION 1162+80.00 TO STATION 1450+95.00
OMISSION STATION 1416+53.00 TO STATION 1417+23.00
OMISSION STATION 1442+63.00 TO STATION 1444+62.00

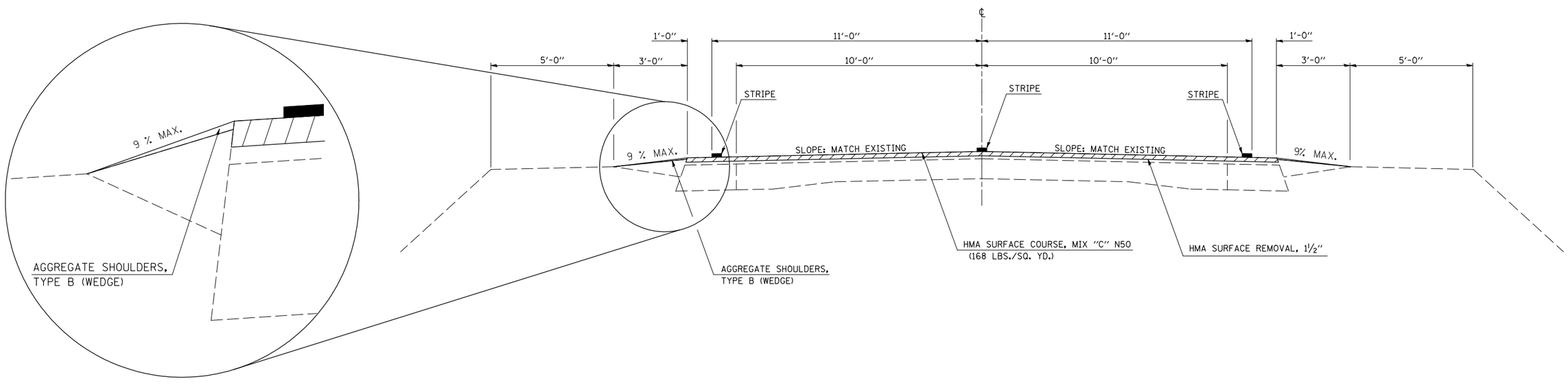

PLOT DATE = 3/25/2009
FILE NAME = c:\pw_work\PWIDOT\AUSTINRL\d0128975\70508plan.dgn
PLOT SCALE = 42.3529 ' / IN.
USER NAME = austinrl