STATE OF ILLINOIS
DEPARTMENT OF TRANSPORTATION

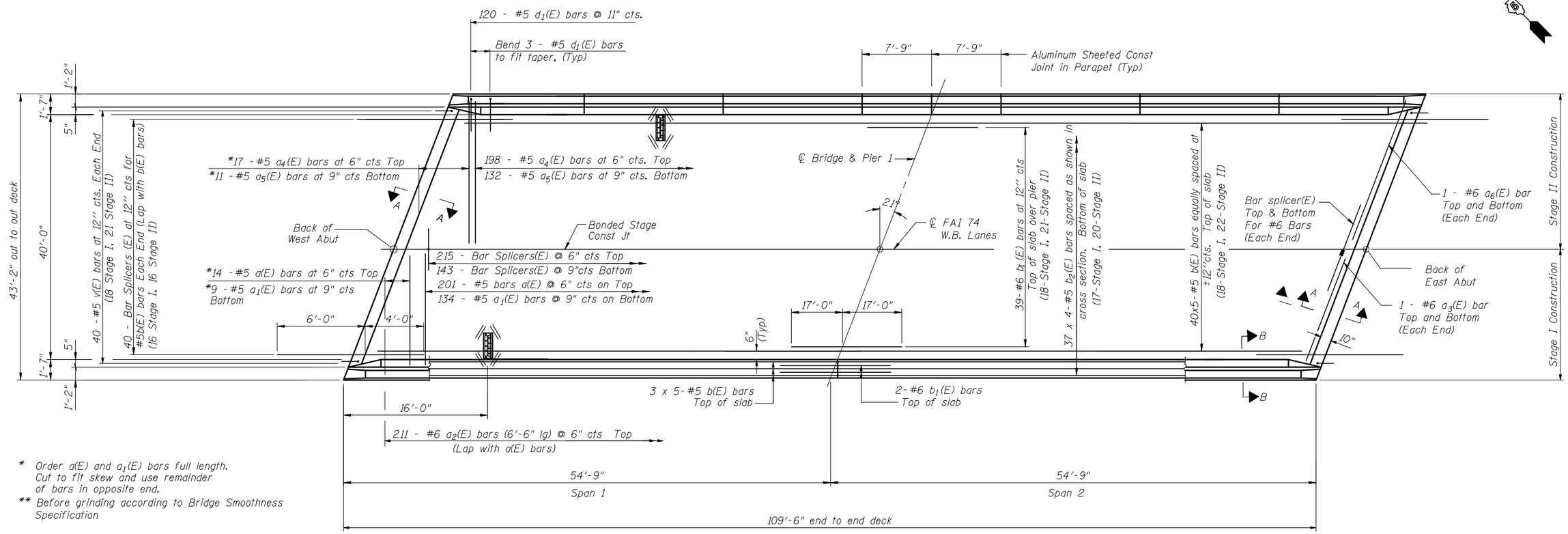

* Order a(E) and a_1(E) bars full length. Cut to fit skew and use remainder of bars in opposite end.

** Before grinding according to Bridge Smoothness Specification

PLAN

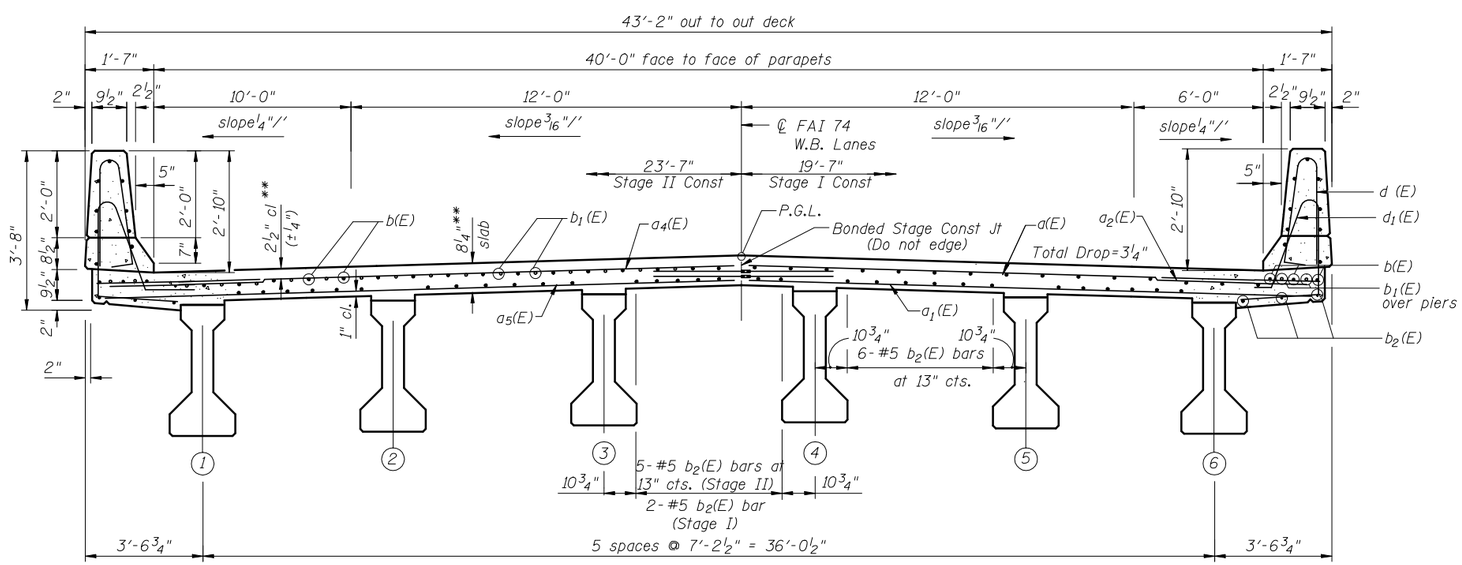

NEAR PIER

CROSS SECTION

(Looking Upstation)

NEAR MIDSPAN

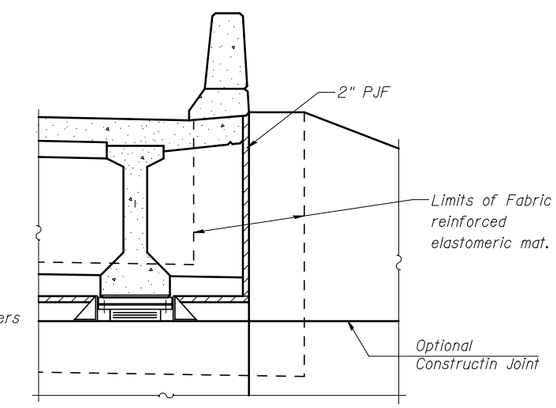

SECTION B-B

(Typ. all Four Corners)

Notes:

See Sheet 10 of 26 for section A-A.

See Sheet 9 of 26 for superstructure details and Bill of Material.

Bars indicated thus 39 x 4-#5 etc. indicates 39 lines of bars with 4 lengths per line.

See Sheet 9 of 26 for parapet reinforcement.

Reinforcement bars shown on this sheet are included in Bill of Material on Sheet 9 of 26 .

See Sheet 10 of 26 for Section A-A.

Work this sheet with sheet 9, 10 and 11 of 26 .

MIN. BAR LAP

#5 Bar = 1'-8"

DECK REINFORCEMENT
STRUCTURE NO. 057-0129

THE UPCHURCH GROUP, INC.

SHEET NO. 8	F.A.I RTE.	SECTION	COUNTY	TOTAL SHEETS	SHEET NO.
26 SHEETS	74	(57-22B-1)BR	Mc LEAN	46	18
			CONTRACT NO. 70721		
	FED. ROAD DIST. NO.	ILLINOIS	FED. AID PROJECT		

TUG PROJ. NO.: 3106078-07 PLOT DATE: 3/9/2009 9:09:39 AM FILE NAME: ...\0570129-70721-DeckDet.dgn