③ EXISTING TYPICAL CROSS SECTION

	STATION	TO	STATION		STATION	TO	STATION	
(IL 49 OMISSION)	524+14.00		584+50.00	④	② 1019+00.00		1022+00.00	②
	④ 687+25.00		688+50.00	⑤	② 1036+00.00		1049+00.00	②
	⑤ 693+75.00		812+00.00	⑥	② 1057+00.00		1059+00.00	②
	879+93.50		881+85.00	⑥	② 1067+00.00		1075+00.50	②
	⑥ 884+00.00		964+00.00	②	② 1093+00.00		1096+21.50	(SN 092-0192 OMISSION)
	② 973+00.00		997+80.00	②				

OMISSIONS:
S.N. 092-0045
STA. 714+58.50 TO STA. 715+61.50

S.N. 092-0046
STA. 804+07.50 TO STA. 804+72.50

S.N. 092-0192
STA. 1096+21.50 TO STA. 1097+45.50

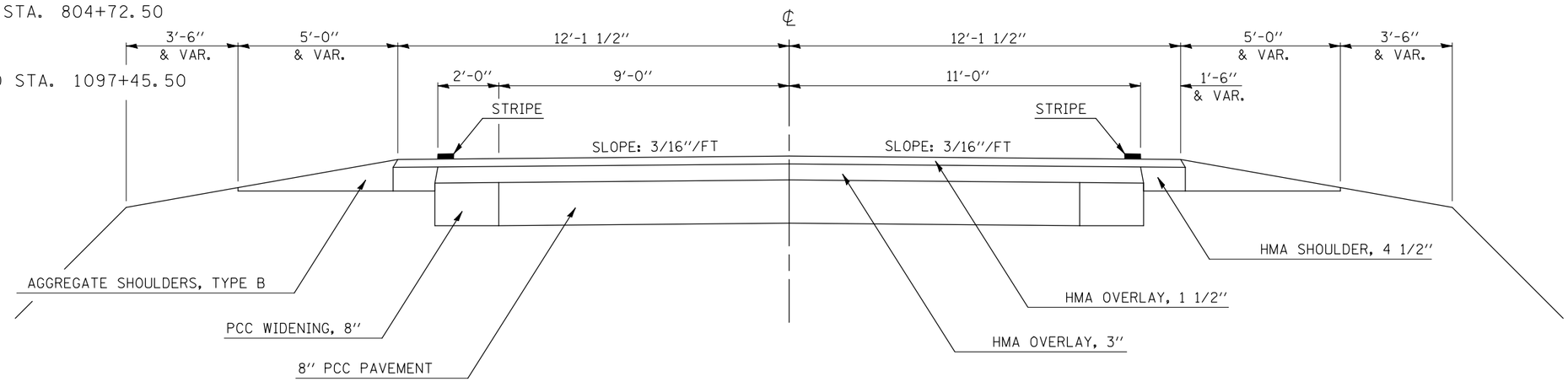

④ EXISTING TYPICAL CROSS SECTION

OMISSION:
S.N. 092-0043
STA. 624+66.50 TO STA. 625+42.50

STATION	TO	STATION	
③ 584+50.00		624+66.50	(SN 092-0043 OMISSION)
625+42.50		687+25.00	③

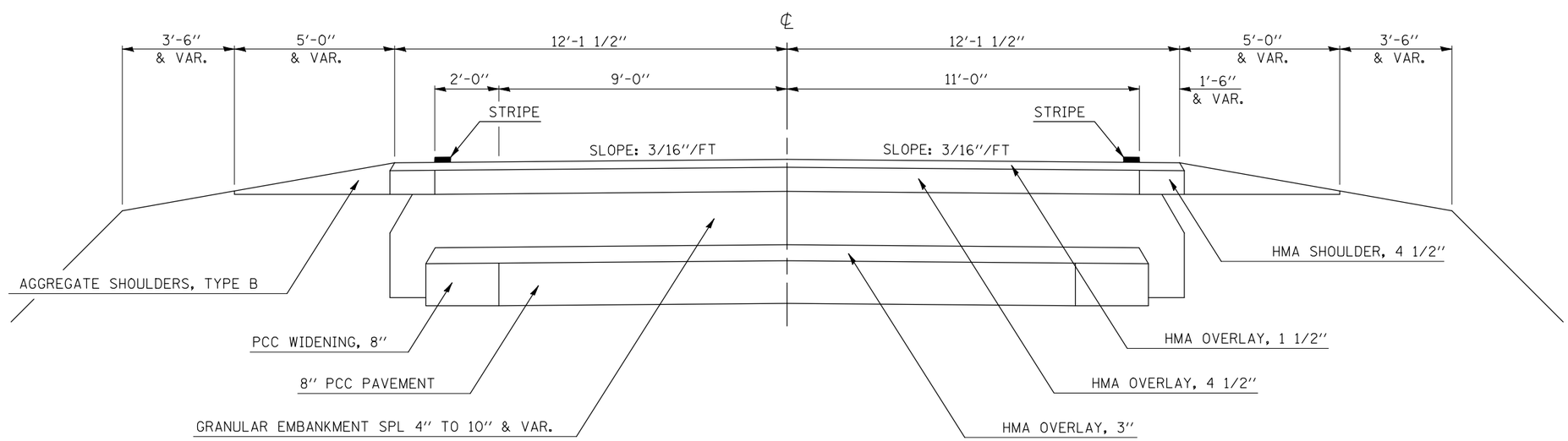

FILE NAME = c:\pw_work\PWIDOT\PIERSONBR\d0115224\D570764-sht-typical.dgn	USER NAME = piersonbr	DESIGNED - WLP	REVISED -	STATE OF ILLINOIS DEPARTMENT OF TRANSPORTATION	EXISTING TYPICAL CROSS SECTIONS	F.A.P. RTE.	SECTION	COUNTY	TOTAL SHEETS	SHEET NO.
	PLOT SCALE = 40.0000 ' / IN.	DRAWN - JDC	REVISED -			697	2RS-3&46RS-8	Vermilion	43	7
	PLOT DATE = 4/10/2009	CHECKED -	REVISED -					CONTRACT NO. 70764		
		DATE - 03/05/09	REVISED -		SCALE: SHEET NO. OF SHEETS STA. TO STA.		ILLINOIS FED. AID PROJECT			