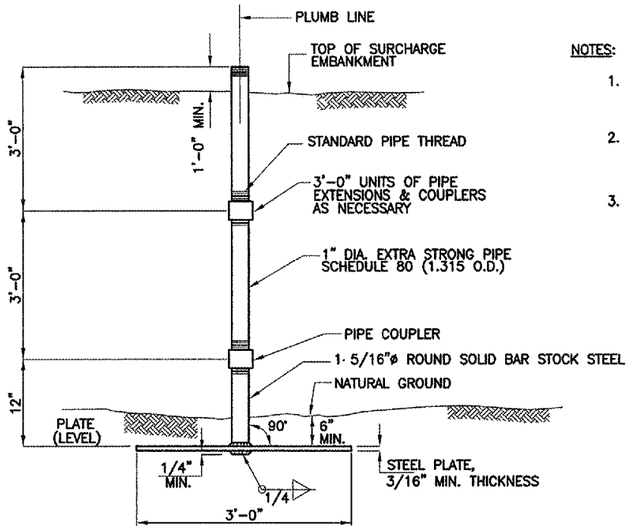

NOTES:

1. INSTALL PROPOSED SETTLEMENT PLATES PRIOR TO INSTALLING THE EMBANKMENT SURCHARGE SOILS.
2. SEE SPECIFICATIONS FOR ADDITIONAL INSTALLATION DETAILS. PLATES TO BE INSTALLED IN THE LOCATIONS SELECTED BY THE ENGINEER.
3. INSTALL ADDITIONAL 3' LONG PIPE SECTIONS AS REQUIRED.

PROPOSED SETTLEMENT PLATES
(10 EACH REQ'D)

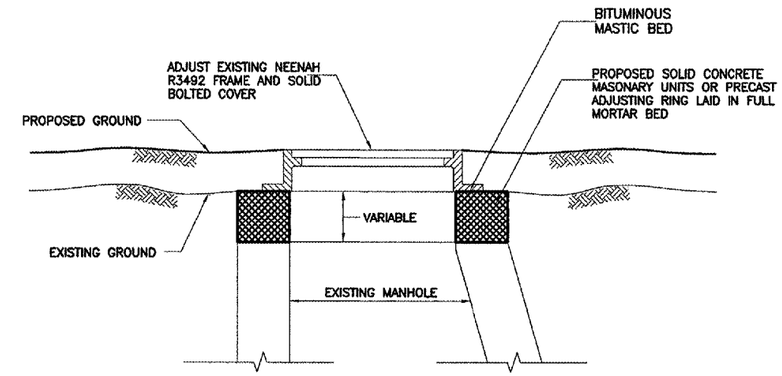

TYPICAL DETAIL – MANHOLE
ADJUST – IN TURF

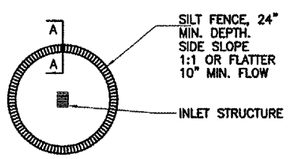

TEMPORARY SEDIMENT TRAP
AT ALL INLET STRUCTURES

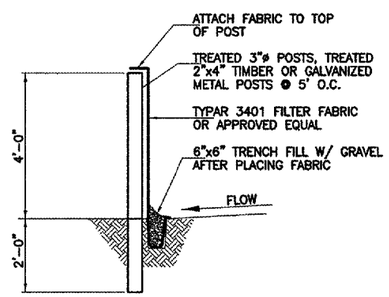

SECTION A–A
SILT FENCE DETAIL
NOT TO SCALE

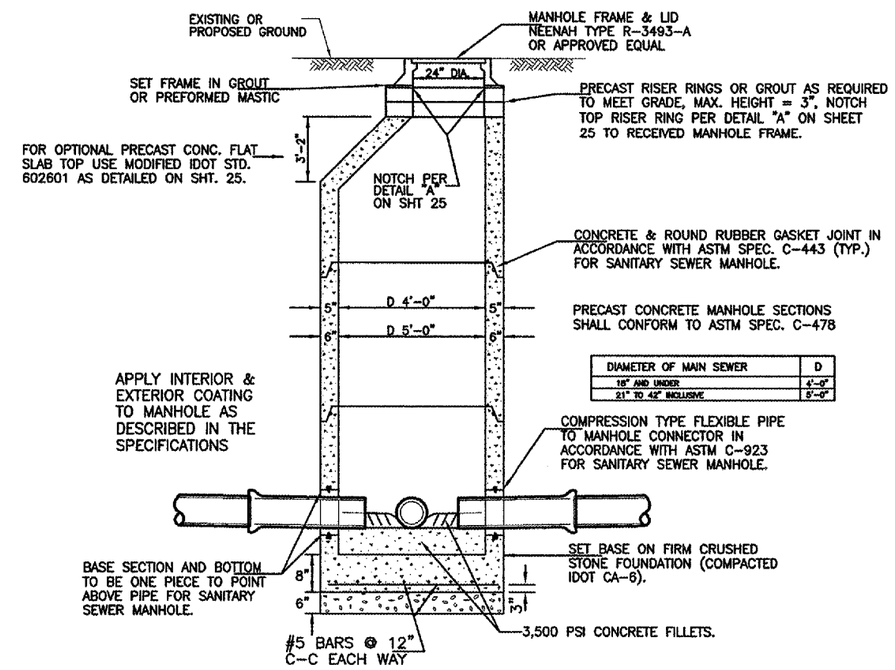

DIAMETER OF MAIN SEWER	D
18" AND UNDER	4'-0"
21" TO 42" INCLUSIVE	5'-0"

ITEM AR770704 SANITARY MANHOLE 4'
(MANOLES FOR SANITARY SEWERS)
NO SCALE

FURNISHING AND INSTALLING CRHD STONE FOUNDATION, FRAME, AND LID TO BE INCLUDED IN THE CONTRACT UNIT PRICE.