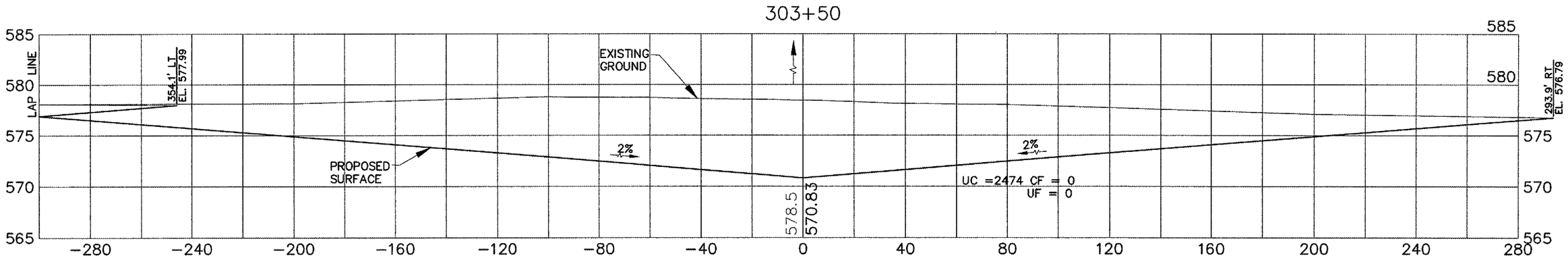

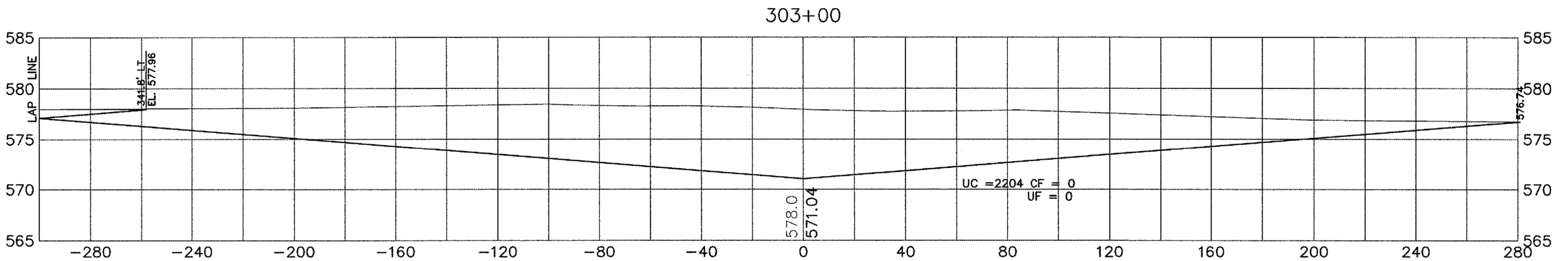

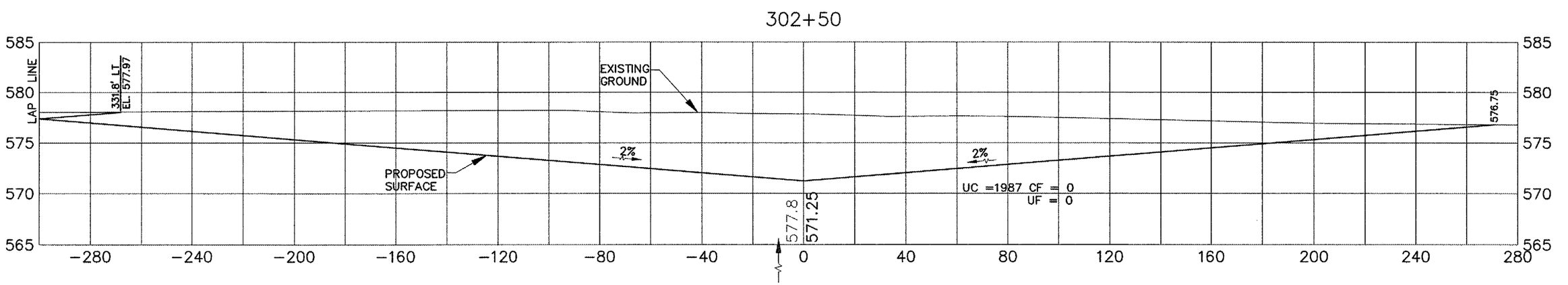

G:\Airport\A07T030 TP ERTHWK DSN\Sections DITCHES.dwg, 4/21/2008 11:44:54 AM, jeffm