CIVIL ENGINEERING CONSULTANTS
RWA
Regina Webster & Associates, Inc.
8619 W. Bryn Mawr Ave., Suite 602
Chicago, IL 60631-3551
773-283-2600 Fax: 773-283-2602
www.RWAengineers.com

CONTROLLER SEQUENCE

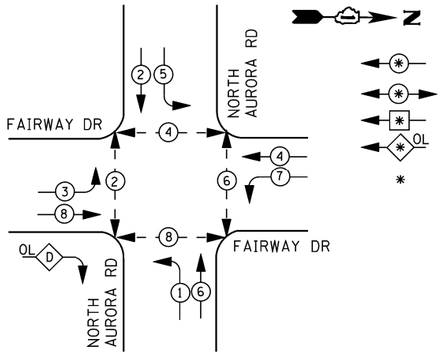

LEGEND

- DUAL ENTRY PHASE
- PEDESTRIAN PHASE
- SINGLE ENTRY PHASE
- OVERLAP
- * NUMBER REFERS TO ASSOCIATED PHASE

PHASE DESIGNATION DIAGRAM

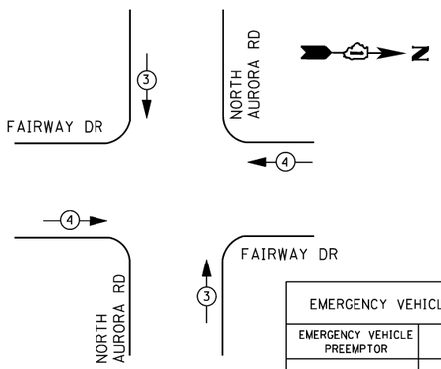

EMERGENCY VEHICLE PREEMPTORS		
EMERGENCY VEHICLE PREEMPTOR	3	4
MOVEMENT	↓ ↑	← →

EMERGENCY VEHICLE PREEMPTION SEQUENCE

I. D. O. T. TRAFFIC SIGNAL INSTALLATION ELECTRICAL SERVICE REQUIREMENTS					
TYPE	NO. LAMPS	WATTAGE		% OPERATIONS	TOTAL WATTAGE
		INCAND.	LED		
SIGNAL (RED)	13	135	17	0.50	111
(YELLOW)	13	135	25	0.25	82
(GREEN)	13	135	15	0.25	49
ARROW	20	135	12	0.10	24
PED. SIGNAL	8	90	25	1.00	200
CONTROLLER	1	100	100	1.00	100
ILLUM. SIGN	--	-	90	0.50	--
LUMINAIRE	1	400	2	0.50	200
					766

ENERGY COSTS- BILLED TO: CITY OF NAPERVILLE
400 S. EAGLE ST.
NAPERVILLE, IL 60566

ENERGY SUPPLY - CONTACT BRIAN CHAMBERLAIN
PHONE NAPERVILLE ELECTRIC DEPT.
630-420-6653

SCHEDULE OF QUANTITIES (100% COST TO CITY OF NAPERVILLE)

QUANTITY	UNIT	ITEM
15	SQ FT	SIGN PANEL - TYPE 1
24	SQ FT	SIGN PANEL - TYPE 2
551	FOOT	UNDERGROUND CONDUIT, GALVANIZED STEEL, 2" DIA.
79	FOOT	UNDERGROUND CONDUIT, GALVANIZED STEEL, 2 1/2" DIA.
33	FOOT	UNDERGROUND CONDUIT, GALVANIZED STEEL, 3" DIA.
280	FOOT	UNDERGROUND CONDUIT, GALVANIZED STEEL, 4" DIA.
2	EACH	HANDHOLE
1	EACH	HEAVY-DUTY HANDHOLE
1	EACH	DOUBLE HANDHOLE
237	FOOT	ELECTRIC CABLE IN CONDUIT, 600V (XLP-TYPE USE) 3-1/C NO. 8, 1/C NO. 8 GROUND
1	EACH	LUMINAIRE, SODIUM VAPOR, HORIZONTAL MOUNT, 400 WATT
1	EACH	TRANSCEIVER - FIBER OPTIC
1743	FOOT	ELECTRIC CABLE IN CONDUIT, SIGNAL NO. 14 2C
2513	FOOT	ELECTRIC CABLE IN CONDUIT, SIGNAL NO. 14 3C
1514	FOOT	ELECTRIC CABLE IN CONDUIT, SIGNAL NO. 14 5C
2002	FOOT	ELECTRIC CABLE IN CONDUIT, SIGNAL NO. 14 7C
3090	FOOT	ELECTRIC CABLE IN CONDUIT, LEAD-IN, NO. 14 1 PAIR
504	FOOT	ELECTRIC CABLE IN CONDUIT, SERVICE, NO. 4 2 C
1280	FOOT	ELECTRIC CABLE IN CONDUIT, EQUIPMENT GROUNDING CONDUCTOR, NO. 6 1C
2	EACH	TRAFFIC SIGNAL POST, GALVANIZED STEEL 16 FT.
1	EACH	STEEL MAST ARM ASSEMBLY AND POLE, 60 FT.
1	EACH	STEEL COMBINATION MAST ARM ASSEMBLY AND POLE 46 FT.
12	FOOT	CONCRETE FOUNDATION, TYPE A
4	FOOT	CONCRETE FOUNDATION, TYPE C
14	FOOT	CONCRETE FOUNDATION, TYPE E 36-INCH DIAMETER
21	FOOT	CONCRETE FOUNDATION, TYPE E 42-INCH DIAMETER
3	EACH	DRILL EXISTING HANDHOLE
6	EACH	SIGNAL HEAD, LED, 1-FACE, 3-SECTION, MAST-ARM MOUNTED
2	EACH	SIGNAL HEAD, LED, 1-FACE, 5-SECTION, BRACKET MOUNTED
5	EACH	SIGNAL HEAD, LED, 1-FACE, 5-SECTION, MAST-ARM MOUNTED
1	EACH	SIGNAL HEAD, LED, 2-FACE, 5-SECTION, BRACKET MOUNTED
1	EACH	SIGNAL HEAD, LED, 2-FACE, 1-3 SECTION, 1-5 SECTION, BRACKET MOUNTED
6	EACH	PEDESTRIAN SIGNAL HEAD, LED, 1-FACE, BRACKET MOUNTED WITH COUNTDOWN TIMER
2	EACH	PEDESTRIAN SIGNAL HEAD, LED, 3-FACE, BRACKET MOUNTED WITH COUNTDOWN TIMER
11	EACH	TRAFFIC SIGNAL BACKPLATE, LOUVERED, ALUMINUM
11	EACH	INDUCTIVE LOOP DETECTOR
443	FOOT	DETECTOR LOOP, TYPE I
2	EACH	LIGHT DETECTOR
1	EACH	LIGHT DETECTOR AMPLIFIER
10	EACH	PEDESTRIAN PUSH-BUTTON
1	EACH	TEMPORARY TRAFFIC SIGNAL INSTALLATION
2939	FOOT	REMOVE ELECTRIC CABLE FROM CONDUIT
1	EACH	REMOVE EXISTING TRAFFIC SIGNAL EQUIPMENT
5	EACH	REMOVE EXISTING HANDHOLE
5	EACH	REMOVE EXISTING CONCRETE FOUNDATION
1	EACH	TEMPORARY TRAFFIC SIGNAL TIMING
385	FOOT	EMERGENCY VEHICLE PRIORITY SYSTEM LINE SENSOR CABLE, NO. 20 3/C
1	EACH	FULL-ACTUATED CONTROLLER AND TYPE V CABINET, SPECIAL
1	EACH	UNINTERRUPTABLE POWER SUPPLY, SPECIAL
1	EACH	MASTER CONTROLLER (SPECIAL)

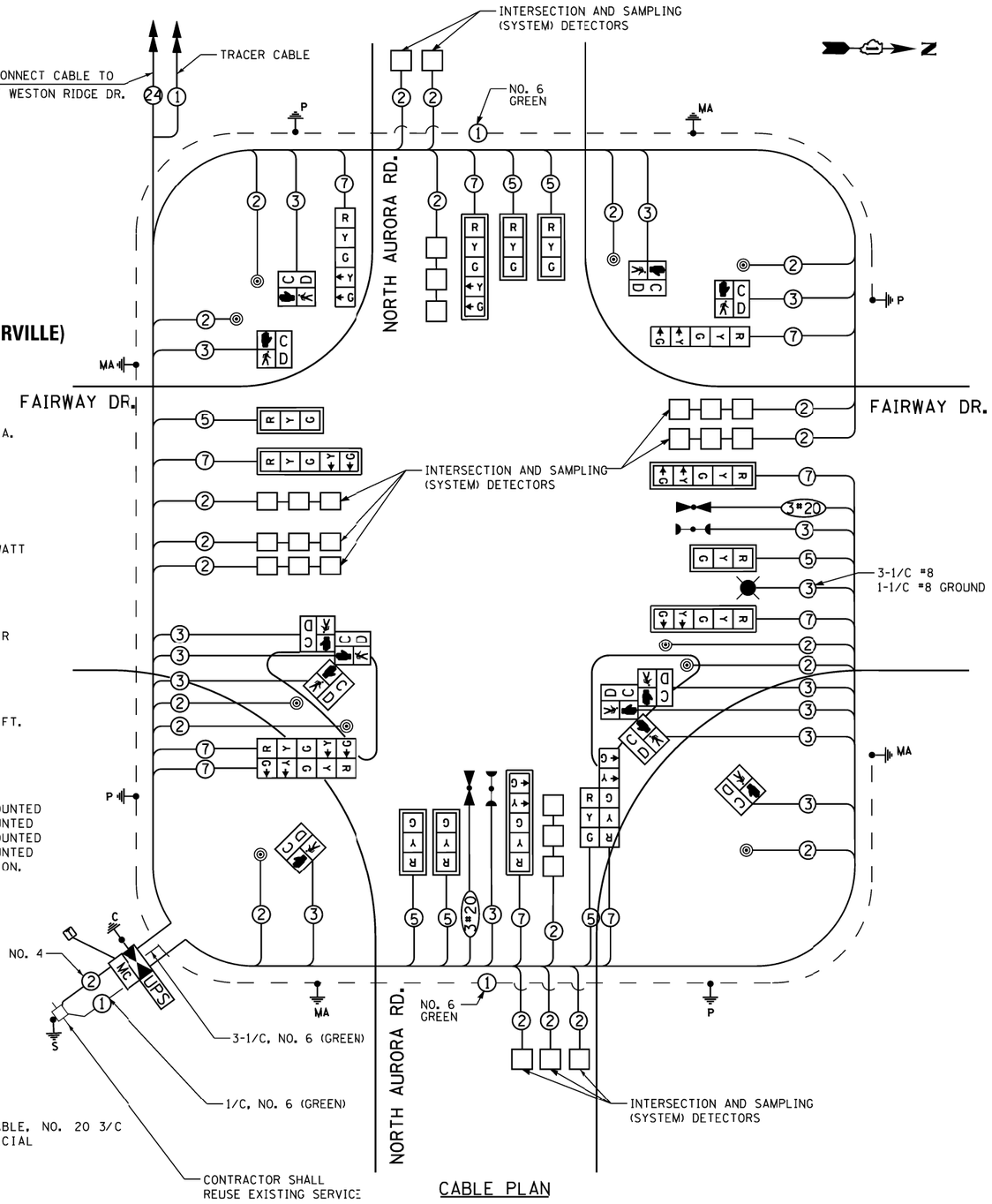

CABLE PLAN

THE TRAFFIC SIGNAL CONTROL EQUIPMENT FOR THIS PROJECT SHALL BE "ECONOLITE" TO MATCH THE EXISTING ADJACENT SYSTEM

FILE NAME = K:\Projects\090059\Design\Sheet Files\6799rwa59cabNF.dgn	USER NAME = $USER$	DESIGNED - DW	REVISED -
	PLOT SCALE = $SCALE$	DRAWN - JDH	REVISED -
	PLOT DATE = 12/6/2012	CHECKED - KMM	REVISED -
		DATE -	REVISED -

STATE OF ILLINOIS
DEPARTMENT OF TRANSPORTATION

NORTH AURORA ROAD AND FAIRWAY DRIVE
CABLE PLAN, SCHEDULE OF QUANTITIES & PHASE DESIGNATION DIAGRAM

SCALE: N.T.S. | SHEET NO. 1 OF 1 SHEETS | STA. | TO STA.

F.A. RTE.	SECTION	COUNTY	TOTAL SHEETS	SHEET NO.
338	(112 & 113) WRS-7	DUPAGE	1156	662
	TS-70	CONTRACT NO. 60R30		
	ILLINOIS FED. AID PROJECT			