ROUTE	SECTION	COUNTY	TOTAL SHEETS	SHEET NO.
	10-00009-00-BR	FRANKLIN	11	4
VILLAGE OF ROYALTON		MAIN STREET		

CONTRACT NO. 99502

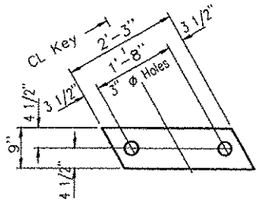

FABRIC BEARING PAD
(Interior)

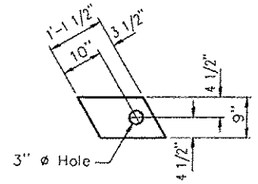

FABRIC BEARING PAD
(Exterior)

FIXED

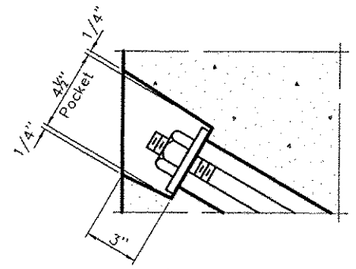

SECTION A–A

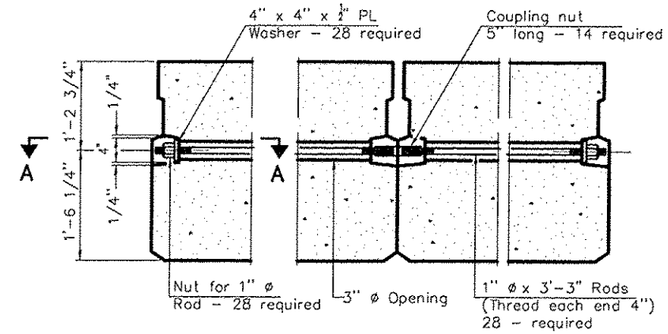

TYPICAL TRANSVERSE TIE ASSEMBLY

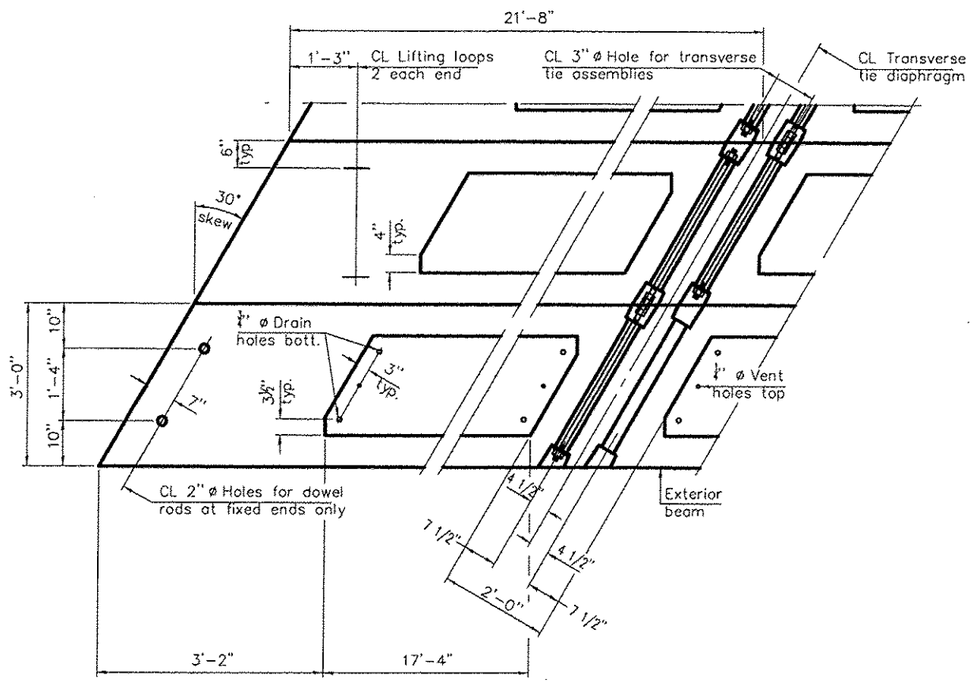

PLAN VIEW

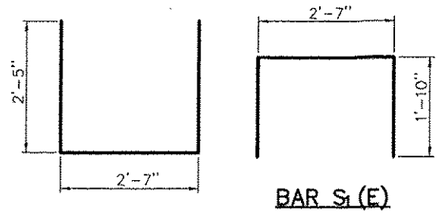

BAR S(E)

BAR S1 (E)

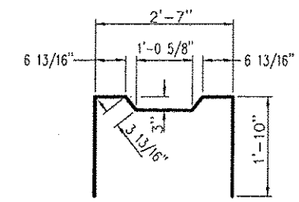

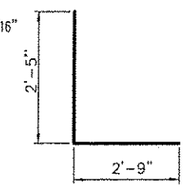

BAR S2 (E)

BAR S3 (E)

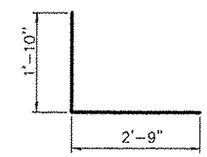

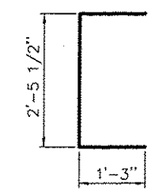

BAR S4 (E)

BAR U(E)

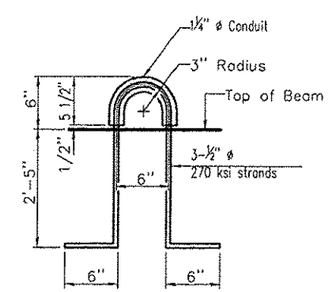

LIFTING LOOP DETAIL

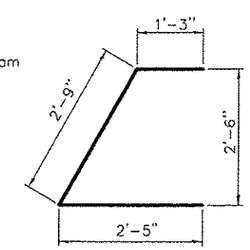

BAR U1 (E)

Note: Connect beams in pairs with the transverse tie configuration shown.

NOTES

Prestressing steel shall be uncoated high strength, low relaxation 7-wire strand, Grade 270. The nominal diameter shall be ½" and the nominal cross-sectional area shall be 0.153 sq. in.

The 1" ø rods in the transverse tie assembly shall be tightened to a snug fit and the threads set. Pockets on exterior faces of bridge shall be filled with grout after transverse tie assembly is in place.

Reinforcement bars shall conform to ASTM A 706, Grade 60. (See Special Provisions).

Two ⅛" fabric adjusting shims of the dimensions of the exterior bearing pad shall be provided for each bearing pad location.

A minimum 2½" ø lifting pin shall be used to engage the lifting loops during handling.

Corrosion Inhibitor, per Article 1020.05(b)(12) and 1021.06 of the Standard Specifications, shall be used in the concrete for precast prestressed concrete deck beams.

Compressive strength of prestressed concrete, f'c, shall be 6000 psi.

Compressive strength of prestressed concrete at release, f'ci, shall be 5000 psi.

BILL OF MATERIAL

Precast Prestressed Conc. Deck Bms. (33" depth)	Sq. Ft.	1560

33" X 36" PPC DECK BEAM DETAILS
STRUCTURE NO. 028-6005

SECTION 10-00009-00-BR
VILLAGE OF ROYALTON

PD-3336-LD 10-1-08